Assembly Instructions

TC-027

Adexa Direct Limited,
Unit 1 Swift Point, Cosford Lane Swift Valley Ind
Est Rugby CV21 1QN

https://adexa.co.uk

E-mail: service@adexa.co.uk
Tel: 01483 931040

Bill of Material

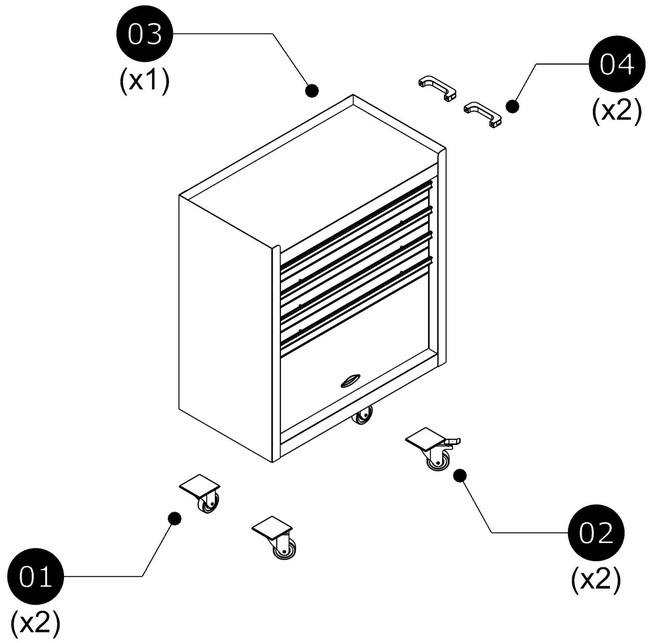

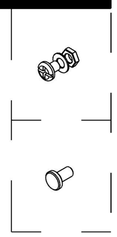

Tool Car Detail

01

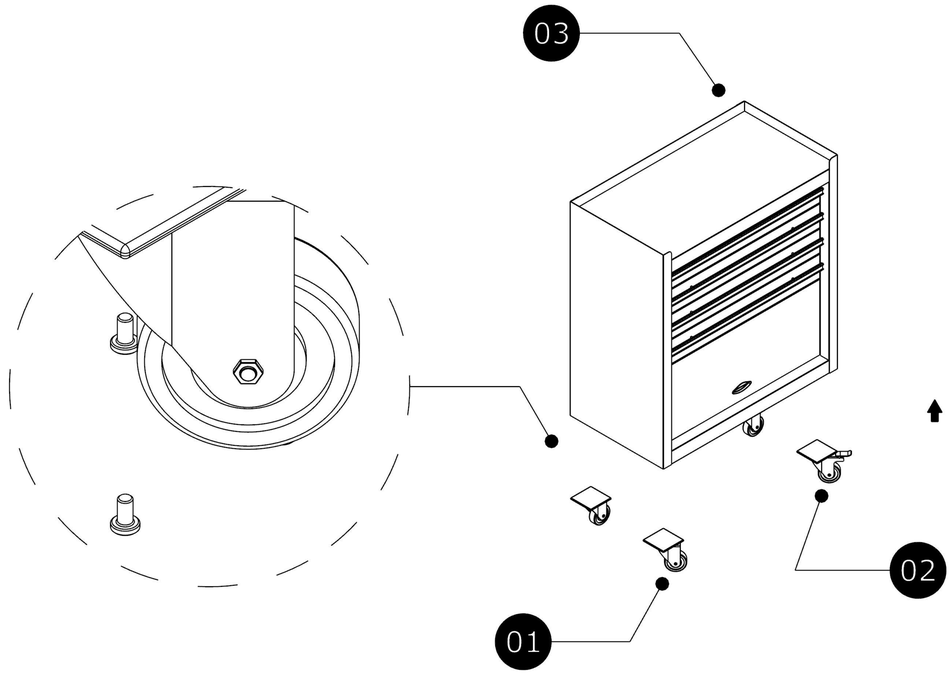

02

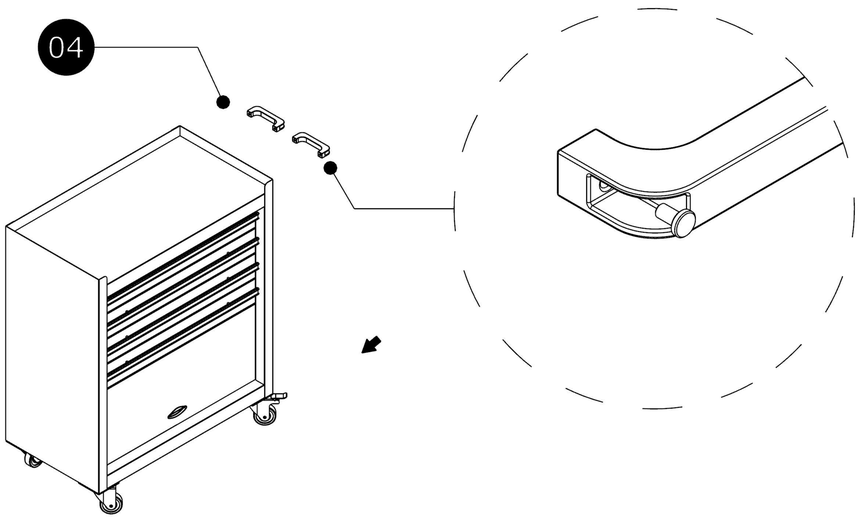

03

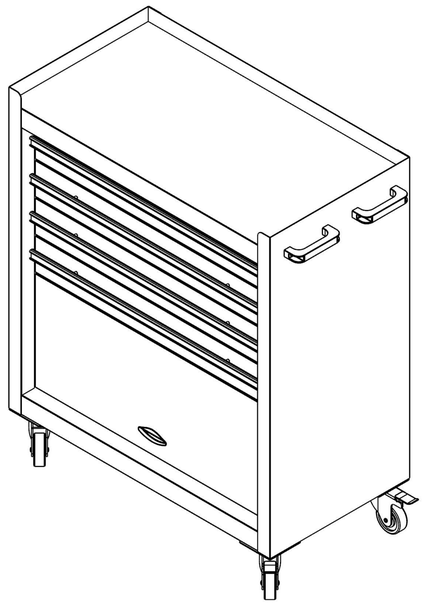

04