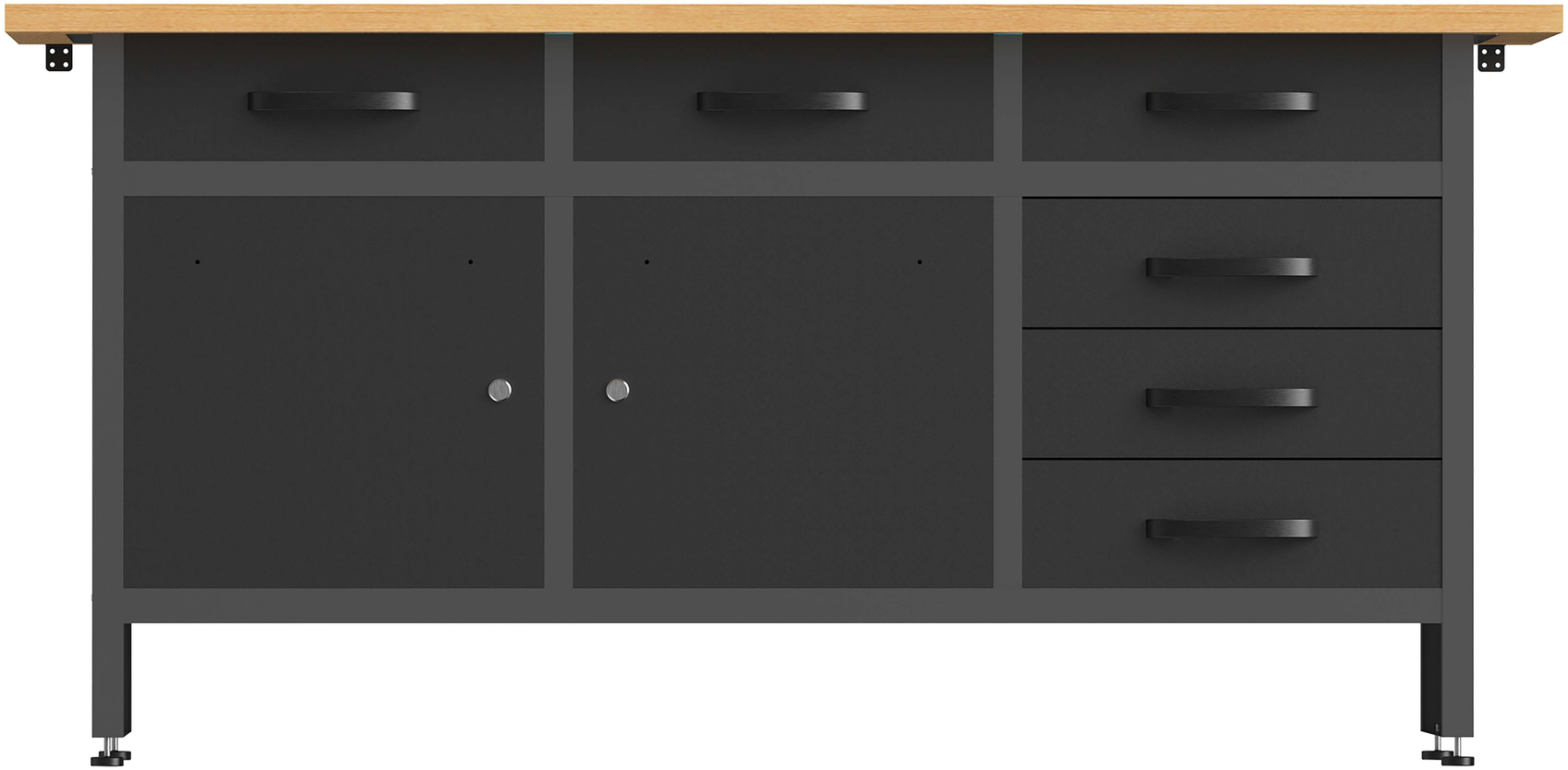

Assembly Instructions

TC-008

Adexa Direct Limited,
Unit 1 Swift Point, Cosford Lane Swift Valley Ind
Est Rugby CV21 1QN

https://adexa.co.uk

E-mail: service@adexa.co.uk
Tel: 01483 931040

Bill of Material

No.	Parts	Dimension in mm （LxWxD）	Quantity
01	Drawer Back	438x125x19	6
02	Drawer Bottom	442x429x22	6
03	Drawer Side	428x126x10	12
04	Drawer Front	438x125x17	6
05	Drawer Surface Panel	457x139x15	6
06	Drawer Handle	44x198x22	6
07	Side Board 1	770x467x65	1
08	L-Plate	210x15x15	4
09	Bottom Middle Side Board1	462x462x30	1
10	Bottom Middle Side Board 2	462x462x30	1
11	Door Stop Trail	418x18x12	2
12	Drawer Slide	35x460x9	12
13	Upper Middle Side Board	522x144x30	2
14	Side Board 2	770x467x65	1
15	Shelf Board	1523x464x37	2
16	Wooden Worktop	1600x600x30	1
17	Height Adjustable Leveler	Ø36	4
18	Mounting Angle	30x30x1.2	2
19	Back Board	1518x482x0.6	1
20	Left Clap Board	496x223x15	1
21	Right Clap Board	489x223x15	1
22	Door Spindle	50xØ5	4
23	Door	460x423x15	2

Explosive Drawing

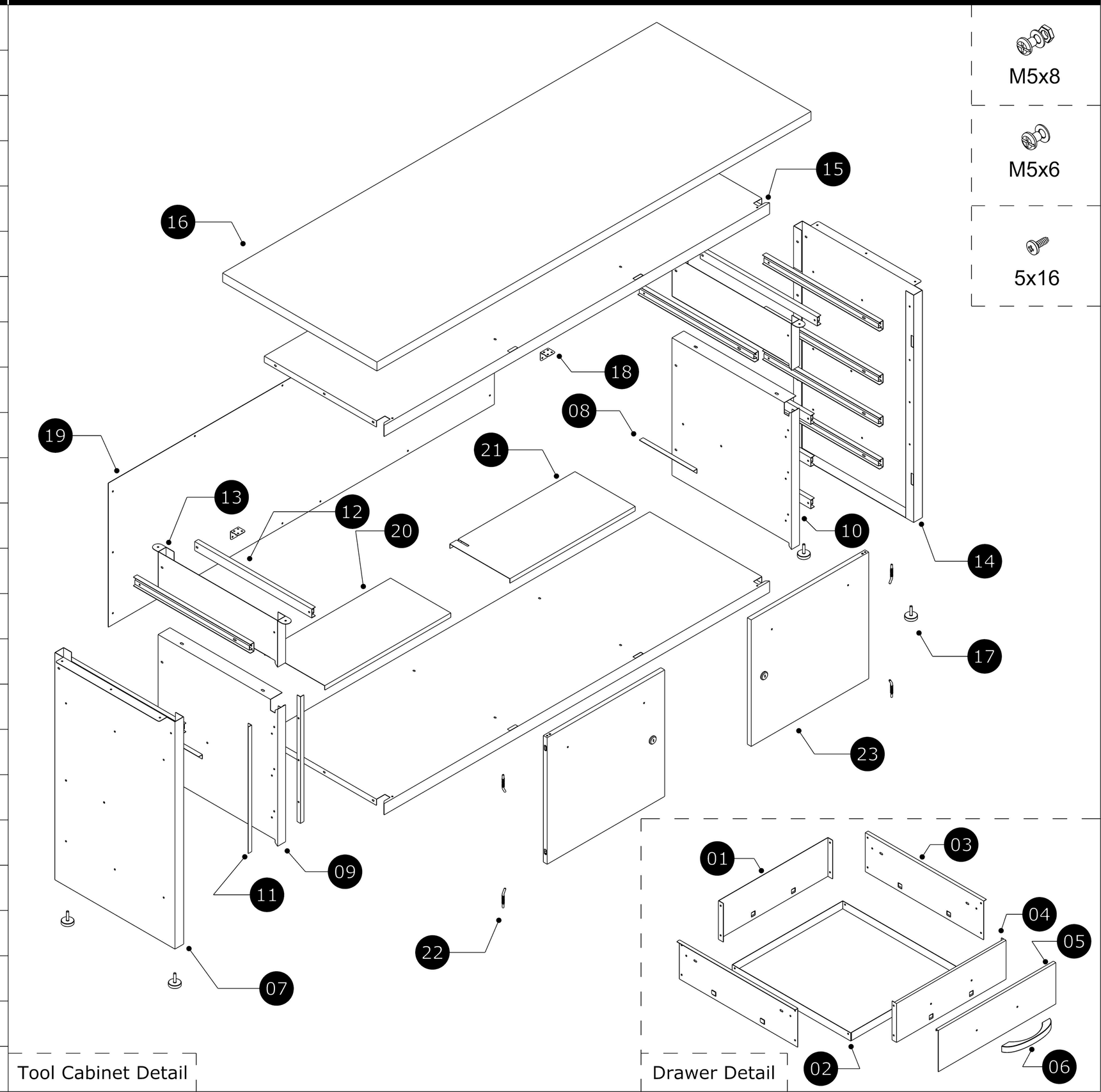

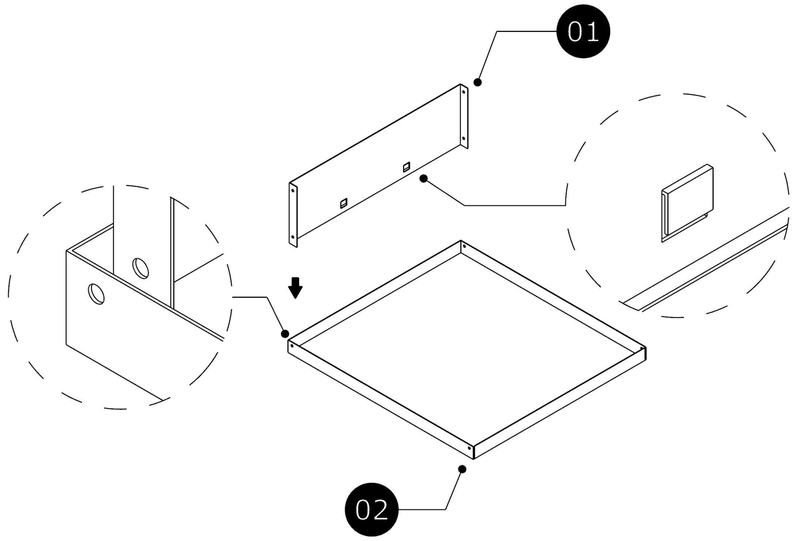

01

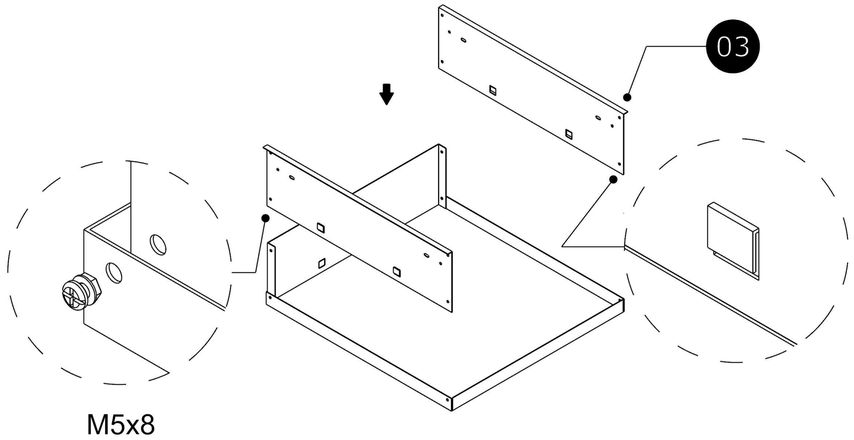

02

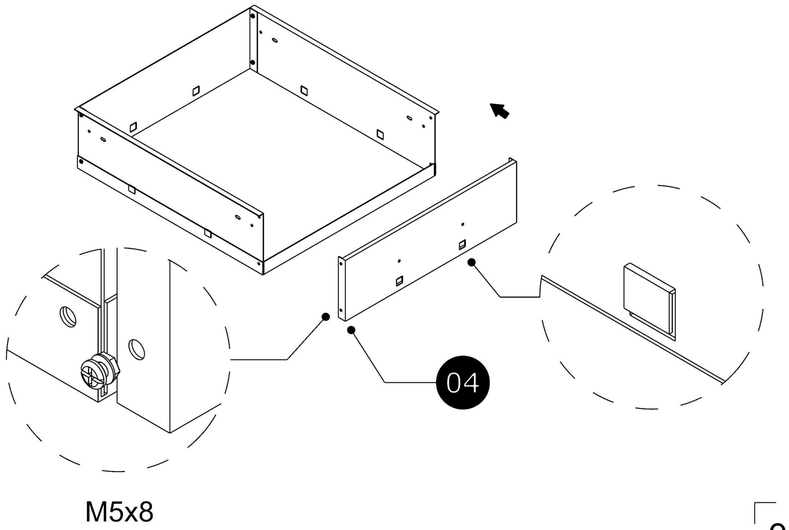

03

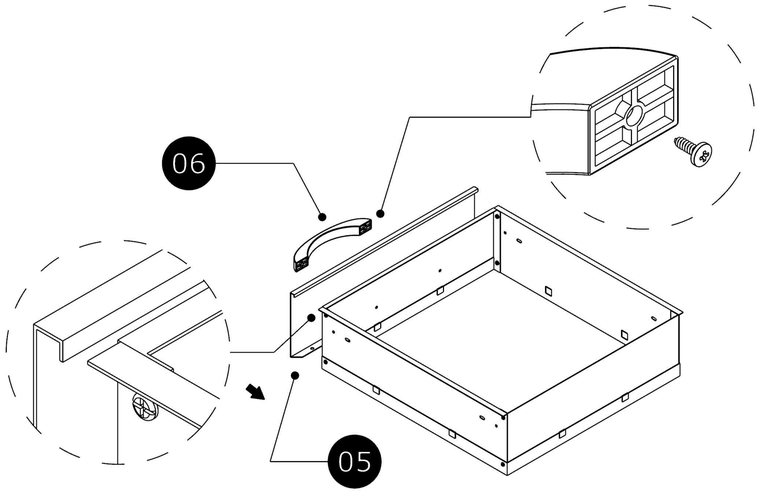

04

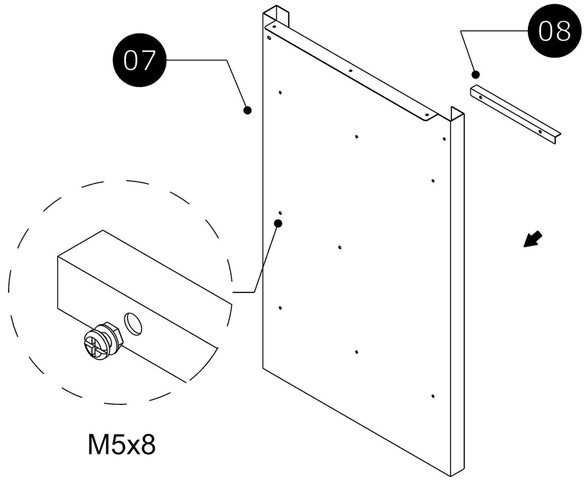

05

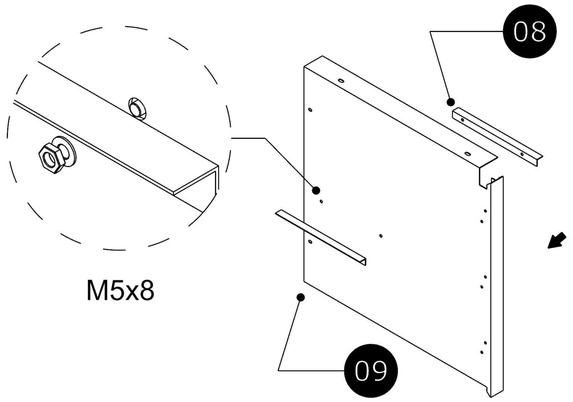

06

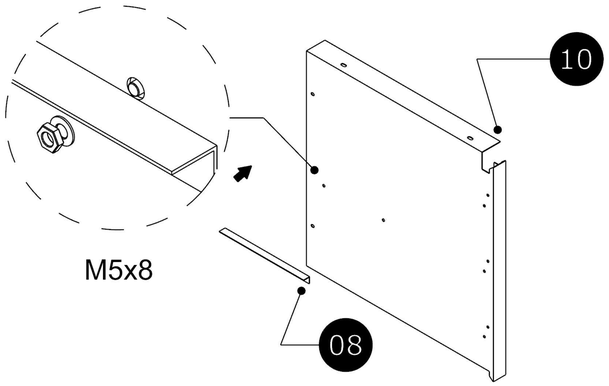

07

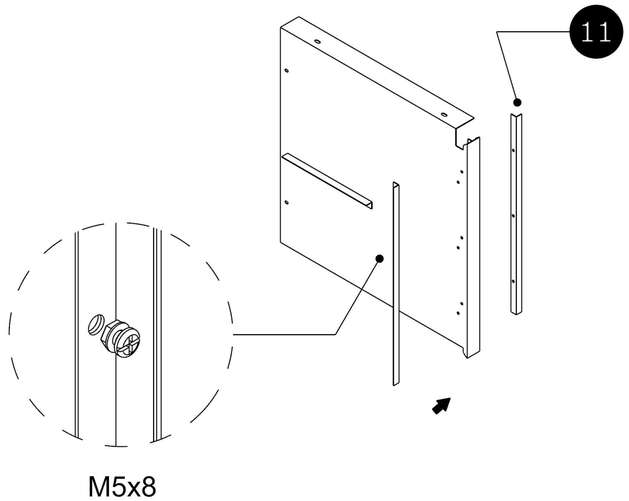

08

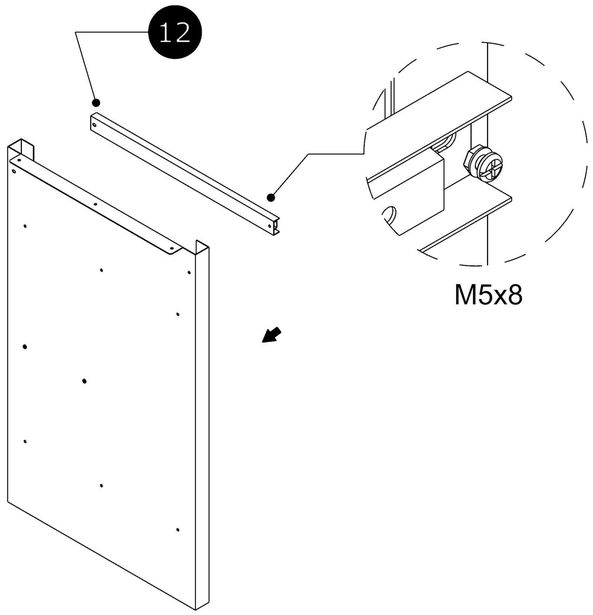

08

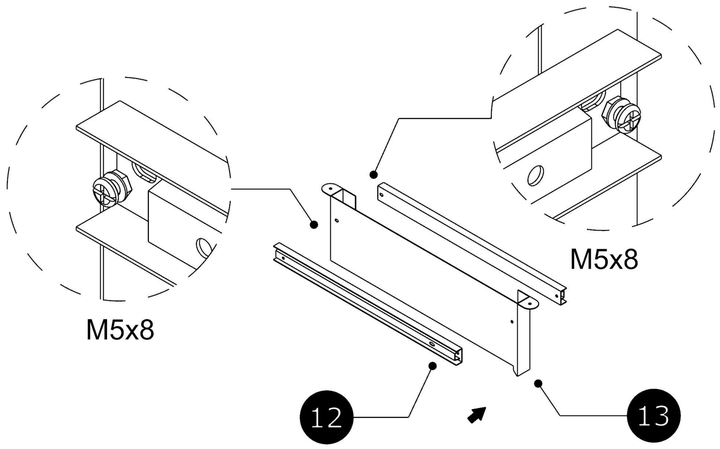

09

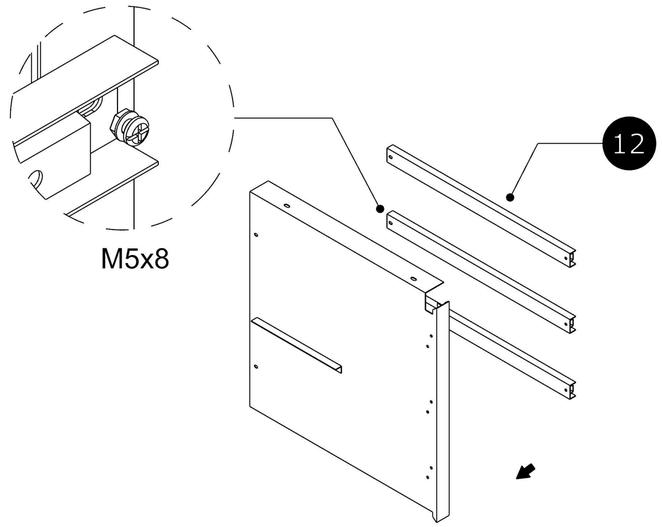

10

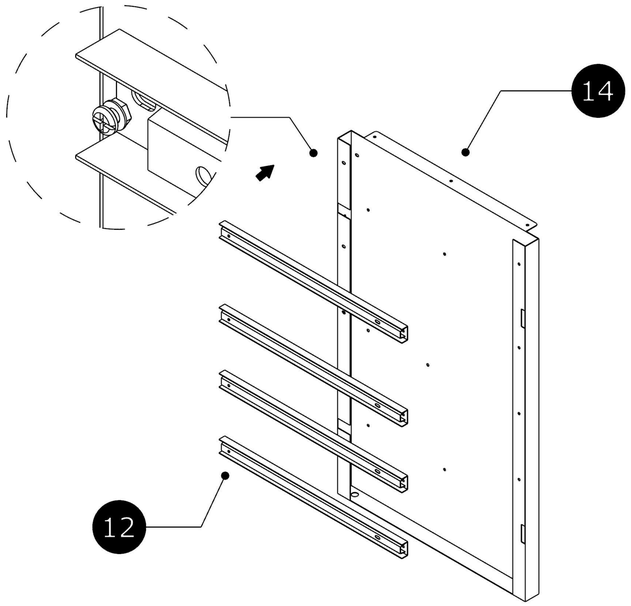

11

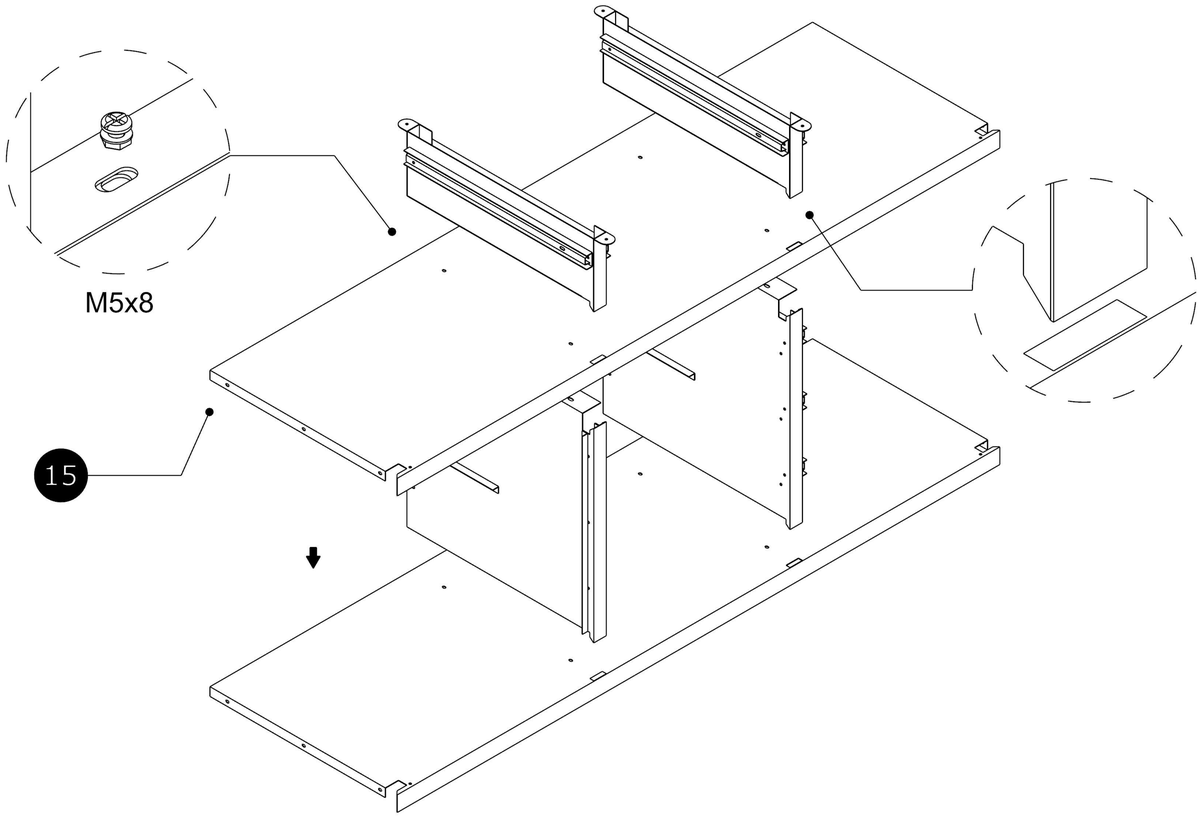

12

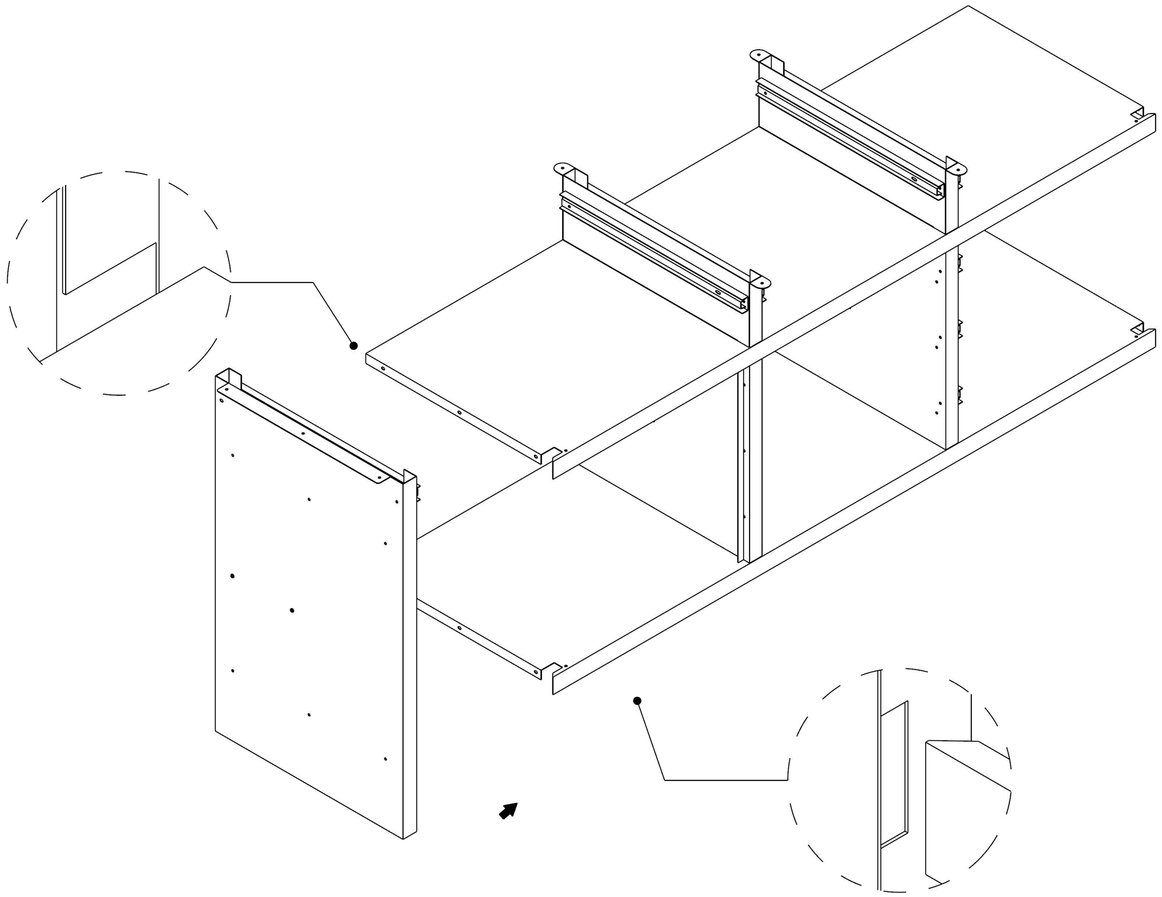

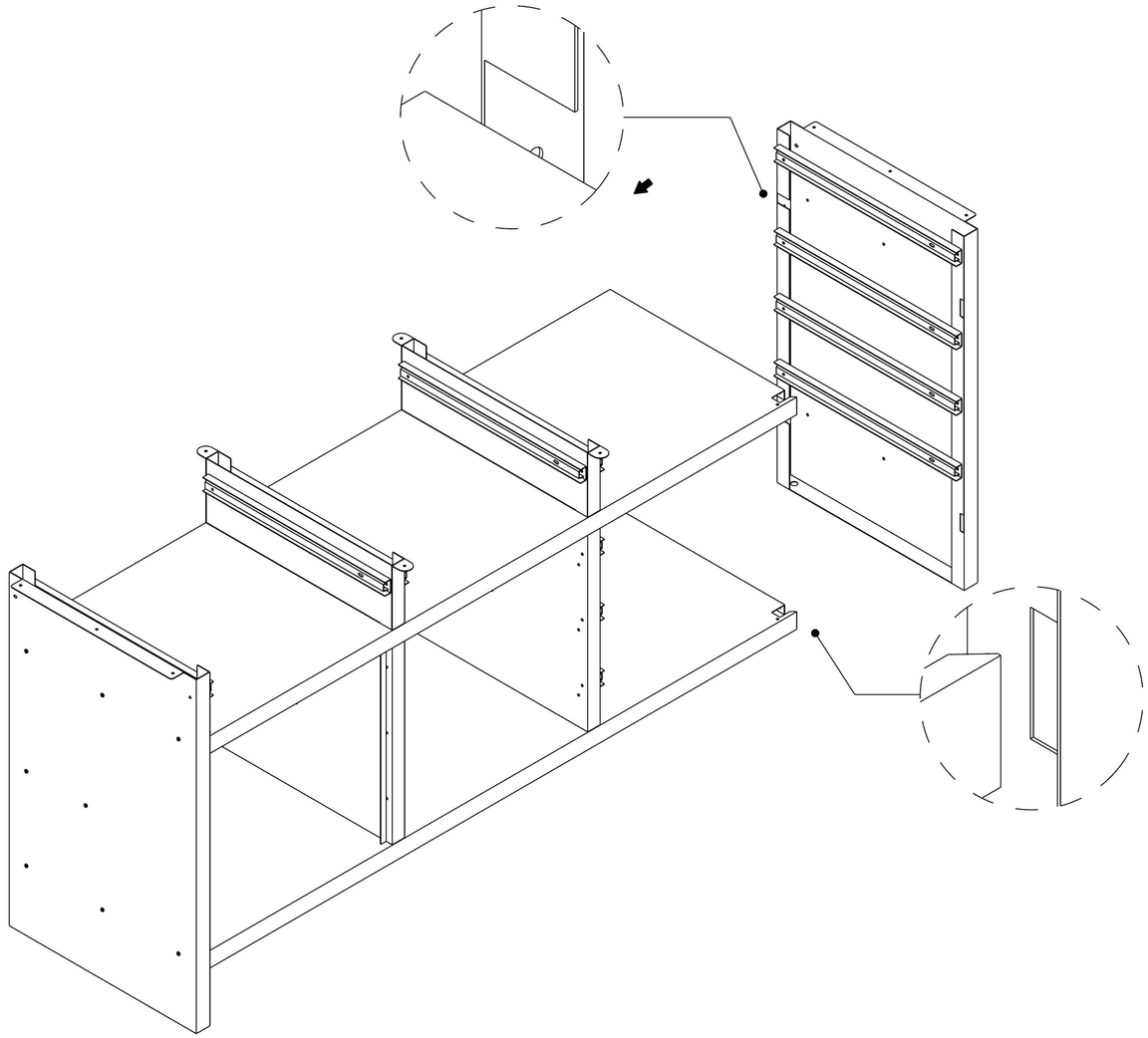

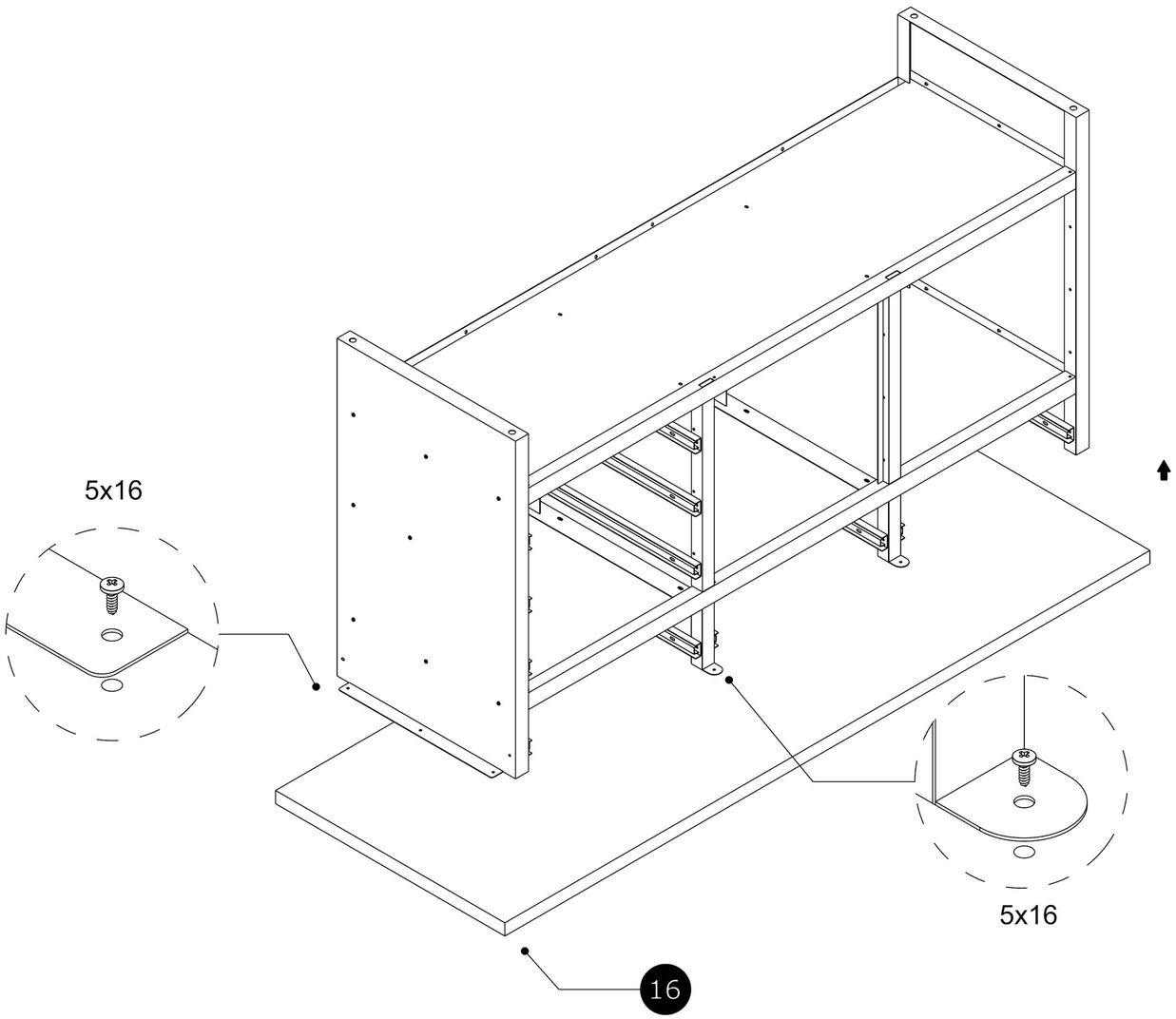
5x16
5x16
16

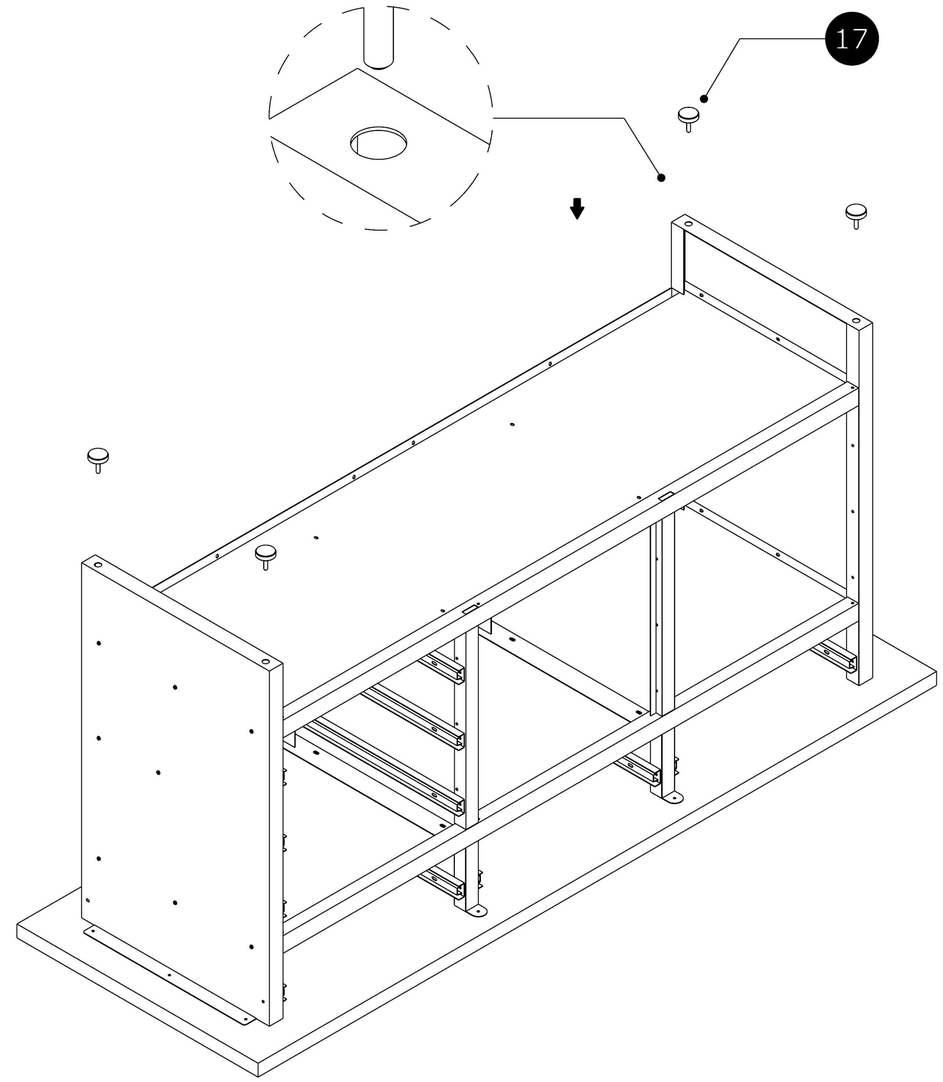
17

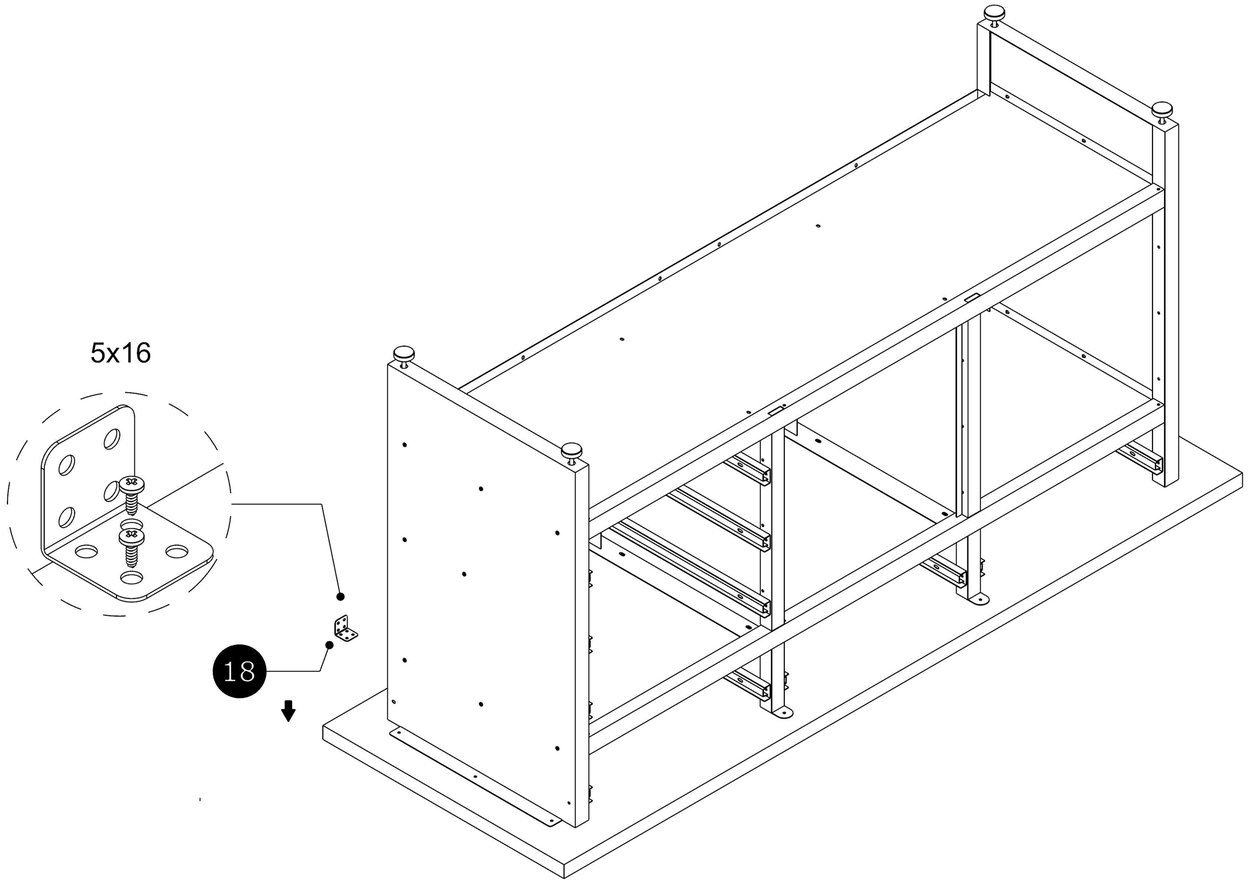
5x16
18

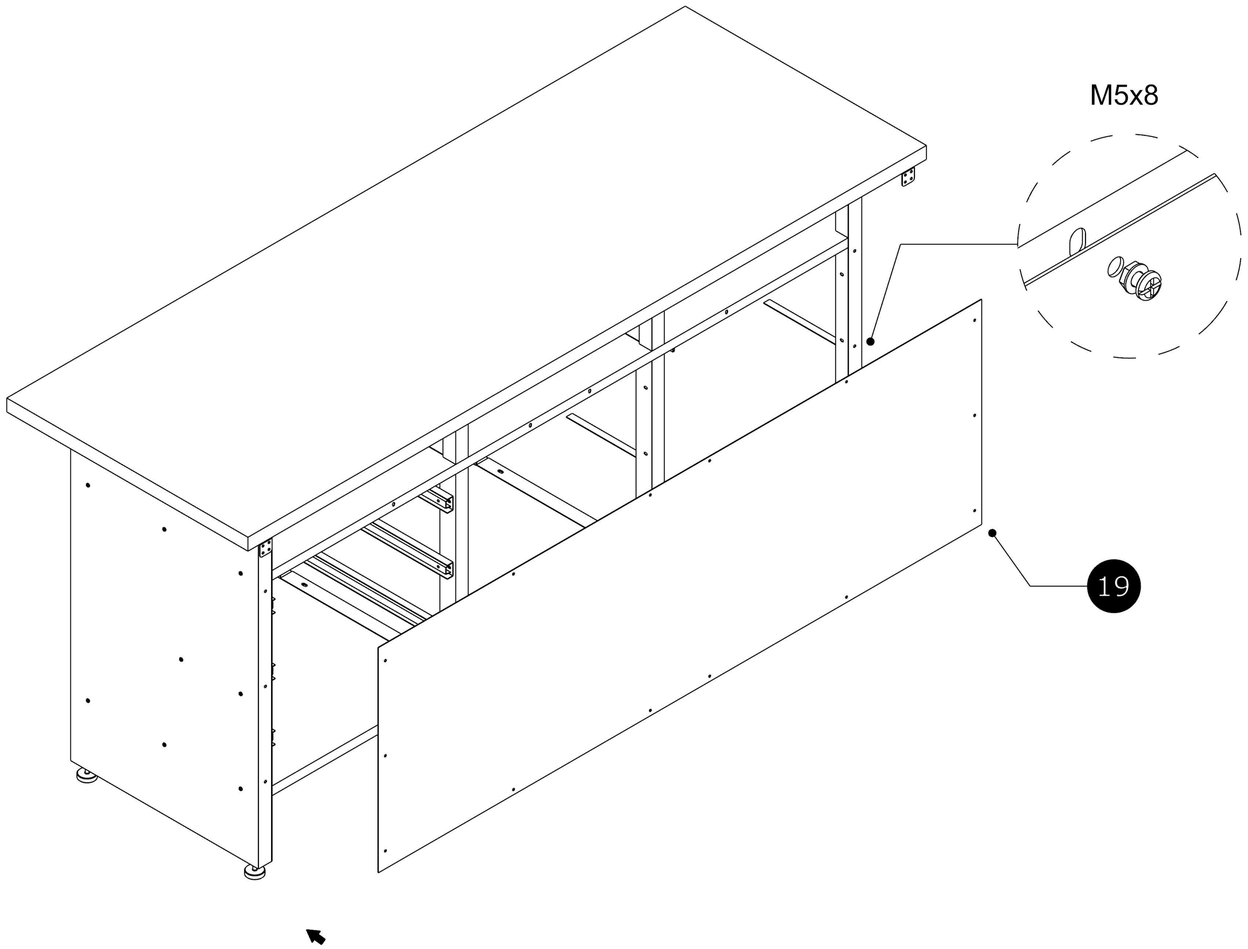
M5x8
19

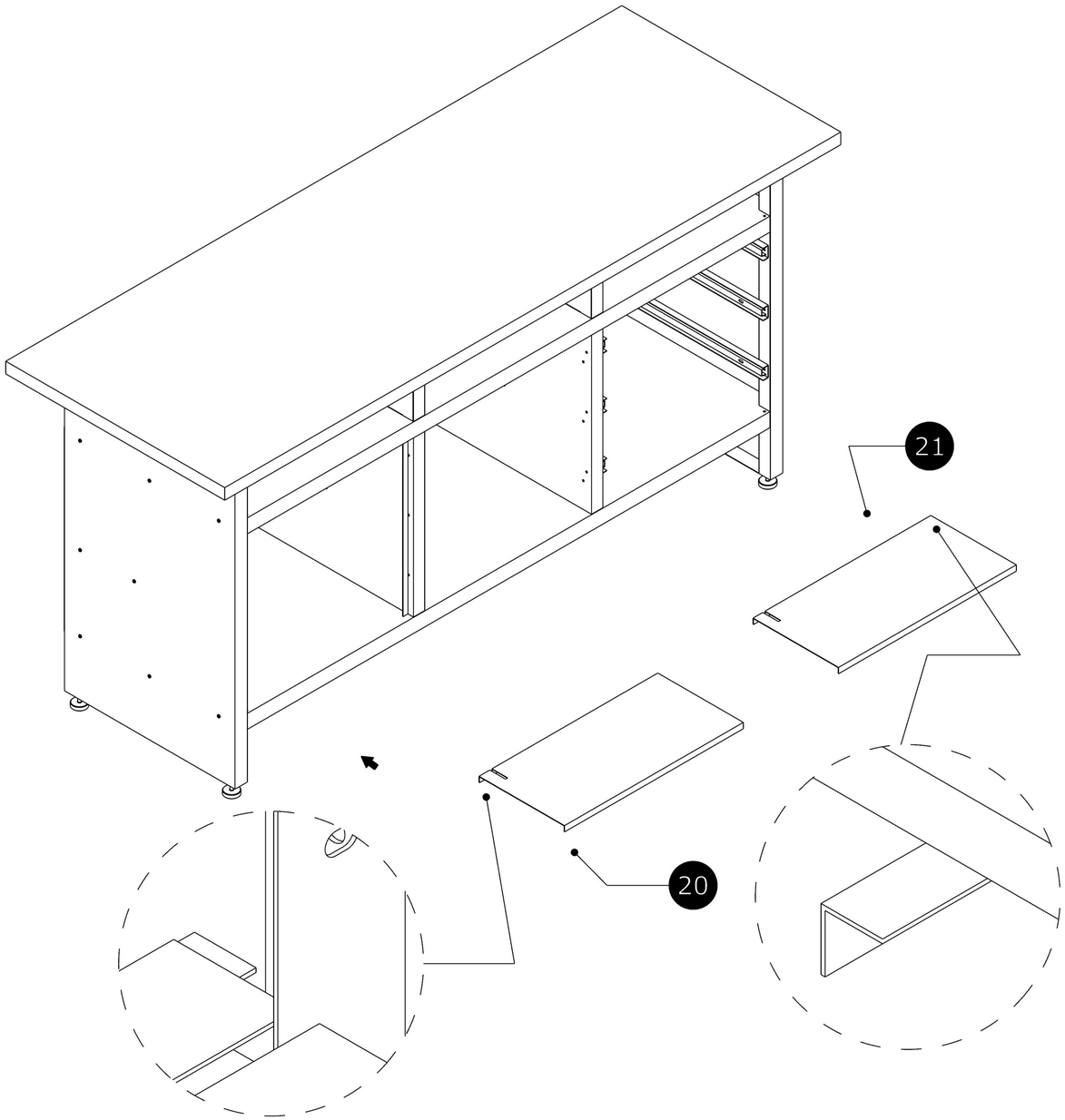
21
20

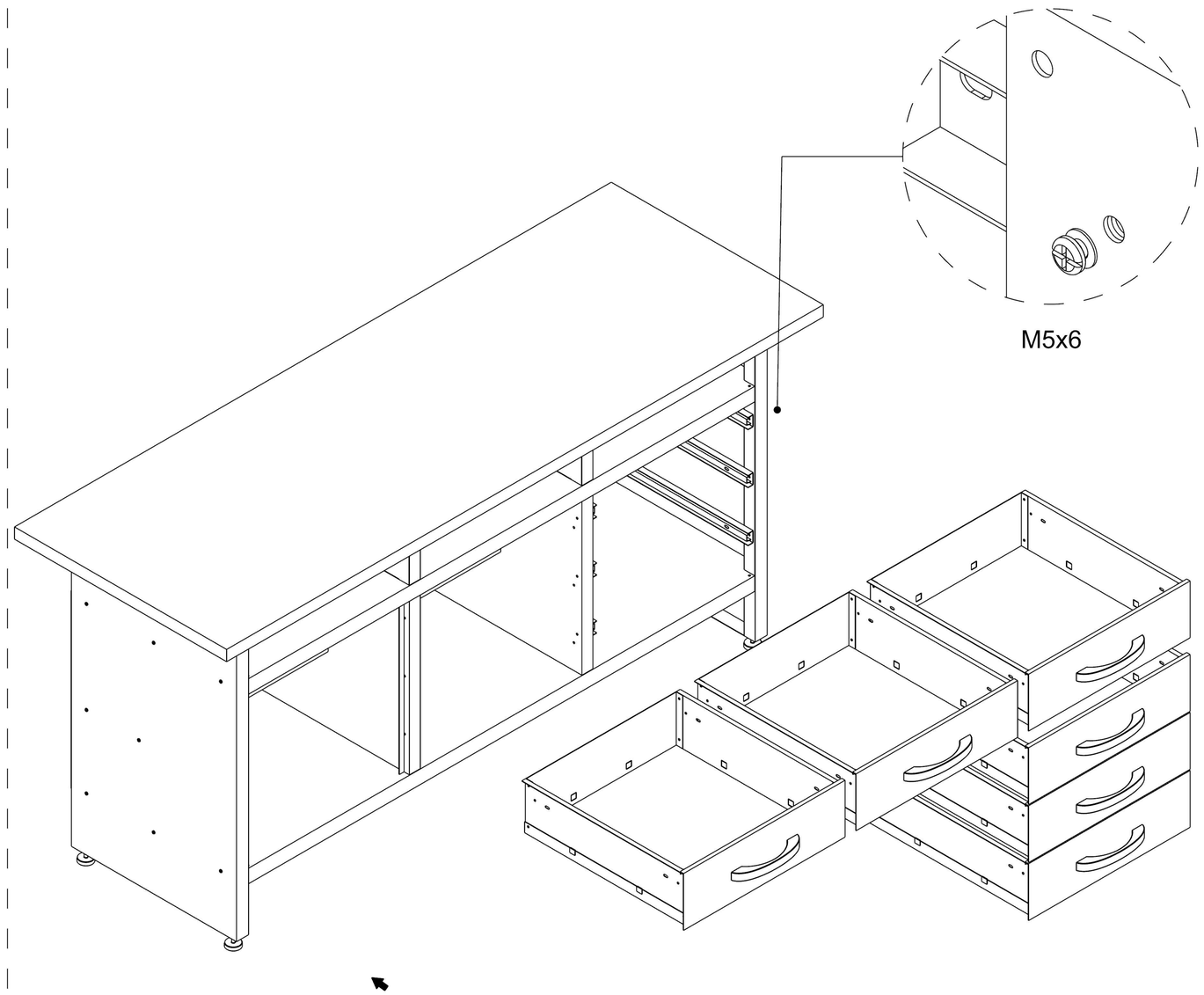
M5x6

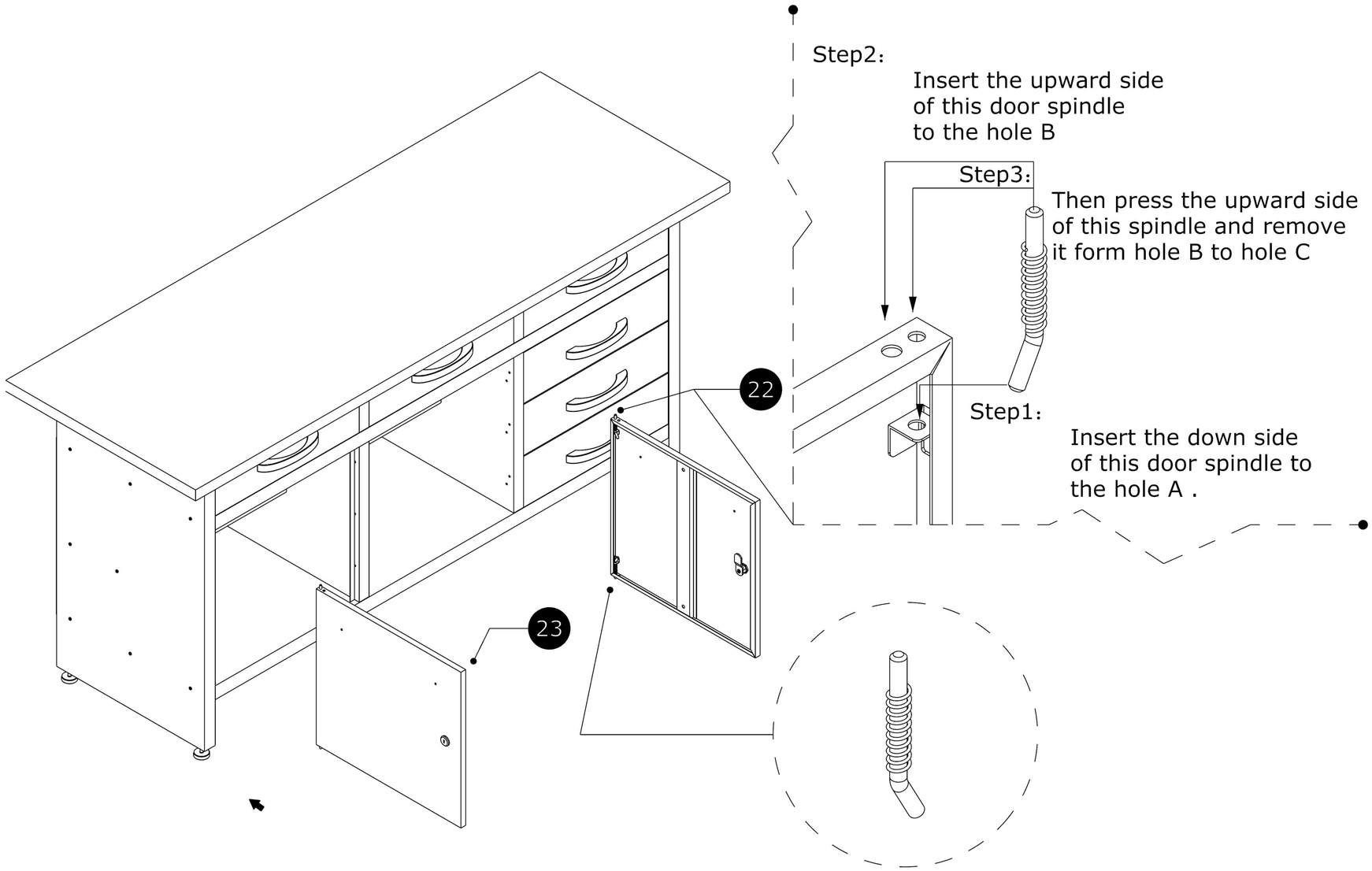
Step2:
Insert the upward side
of this door spindle
to the hole B
Step3:
Then press the upward side
of this spindle and remove
it form hole B to hole C
22
Step1:
Insert the down side
of this door spindle to
the hole A .
23