Assembly Instructions

TC-006B

Adexa Direct Limited,
Unit 1 Swift Point, Cosford
Lane Swift Valley Ind Est
Rugby CV21 1QN

https://adexa.co.uk

E-mail: service@adexa.co.uk
Tel: 01483 931040

Bill of Material

No.	Parts	Dimension in mm （LxWxD）	Quantity
01	Side Board 1	470 x 442 x 18	1
02	Middle Side Board	460 x 422 x 15	1
03	Side Board 2	470 x 442 x 18	1
04	Bottom /Top board	1000 x 476 x 18	2
05	L-Plate	210x15x15	2
06	Back Board	996x461x0.6	1
07	Leg	775 x 40 x 40	4
08	Leg Connection Frame	530 x 30 x 28	2
09	Drawer Back	438 x 125 x 19	1
10	Drawer Bottom	442 x 429 x 22	1
11	Drawer Side	428 x 126 x 10	2
12	Drawer Front	438 x 125 x 17	1
13	Drawer Surface Panel	457 x 139 x 15	1
14	Drawer Handle	44x198x22	1
15	Drawer Hanger	460 x 72 x 14	2
16	Drawer Slide	35x460x9	2
17	Melamine Coated Wooden Worktop	1200 x 600 x 32	1
18	Height Adjustable Leveler	φ43	4
19	Mounting Angle	32x25x1.2	2
20	Clapboard	507 x 297 x 20	1
21	Door	460 x 422 x 15	1
22	Door Spindle	50xØ5	2

Explosive Drawing

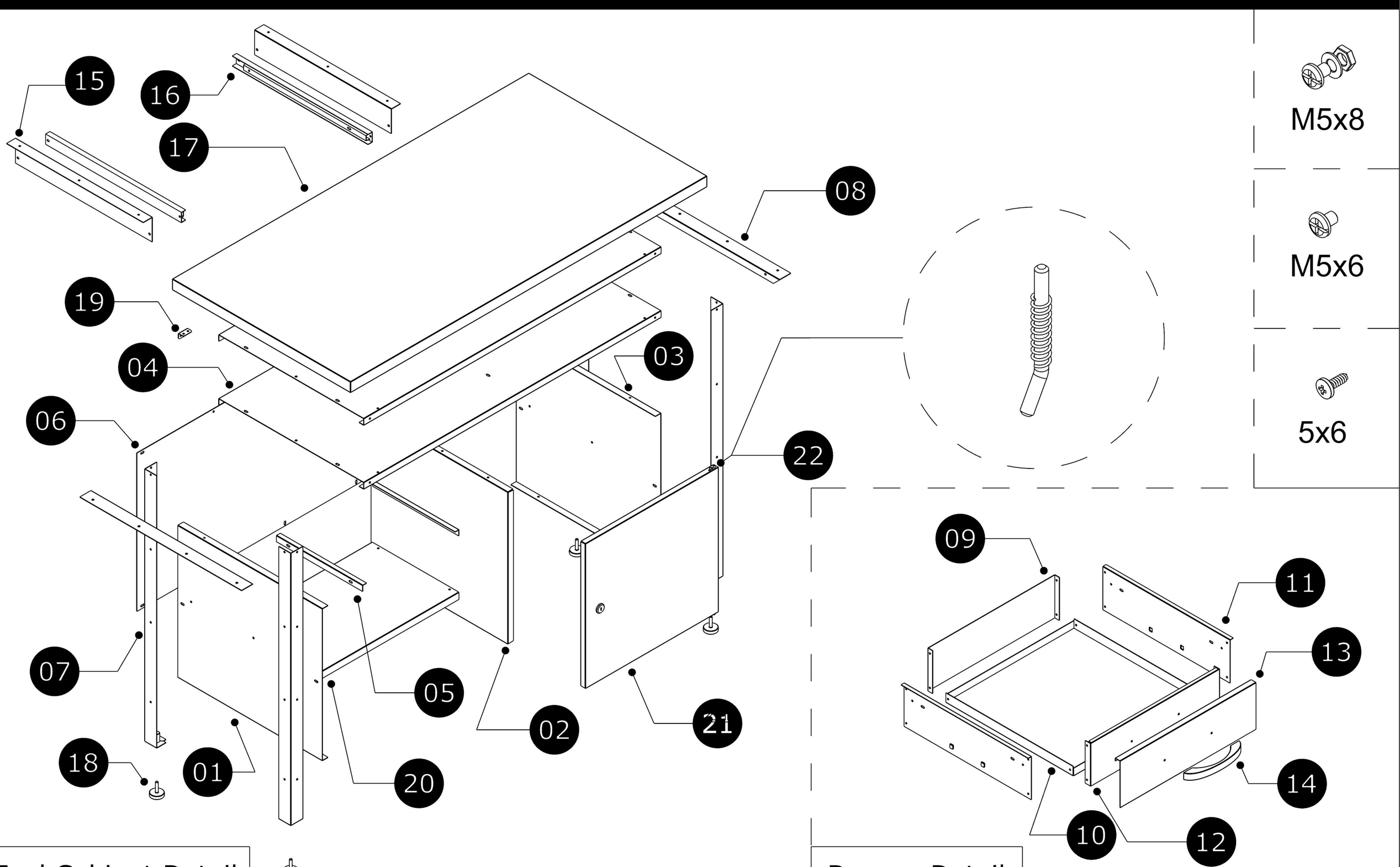

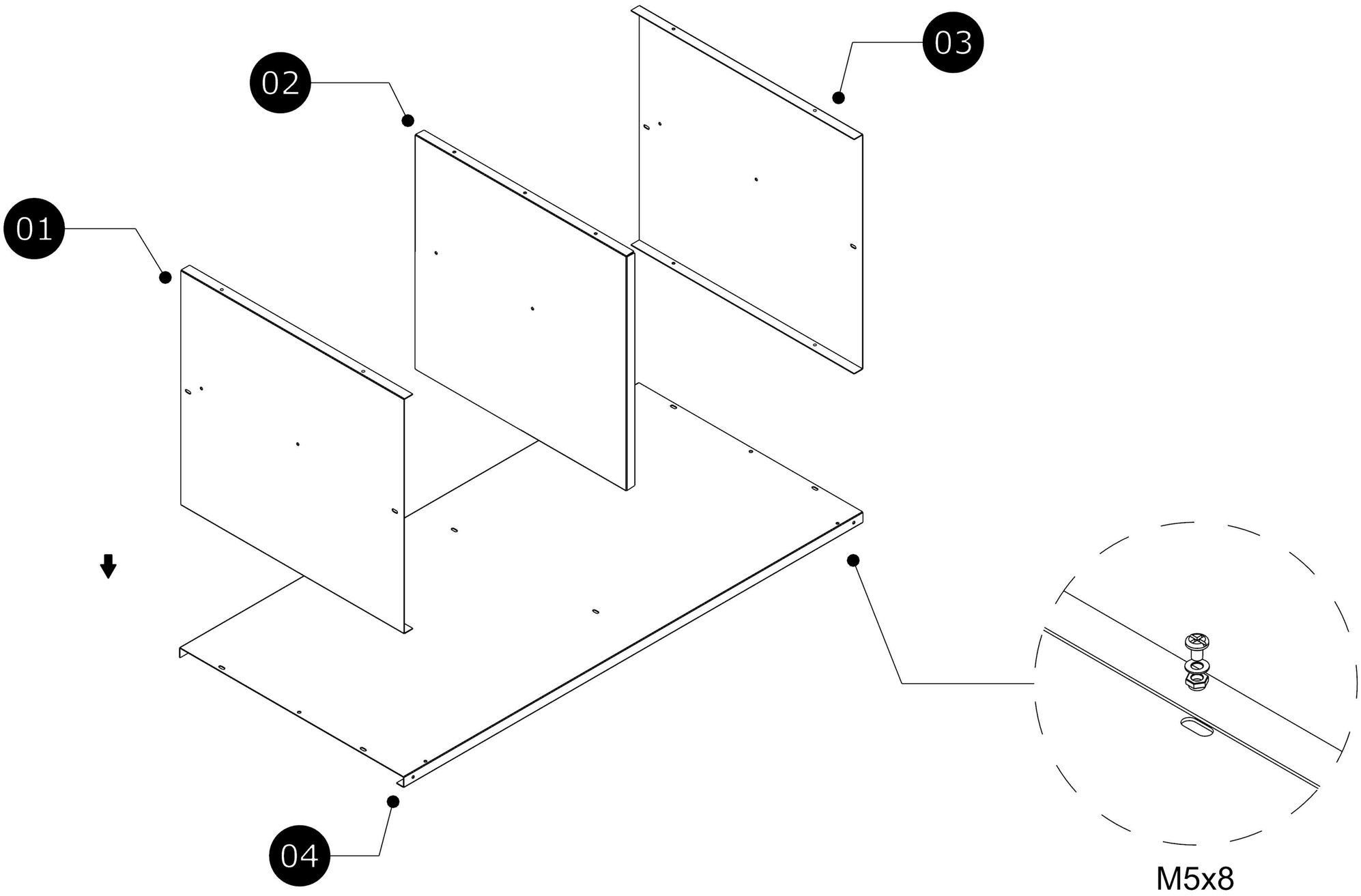

01

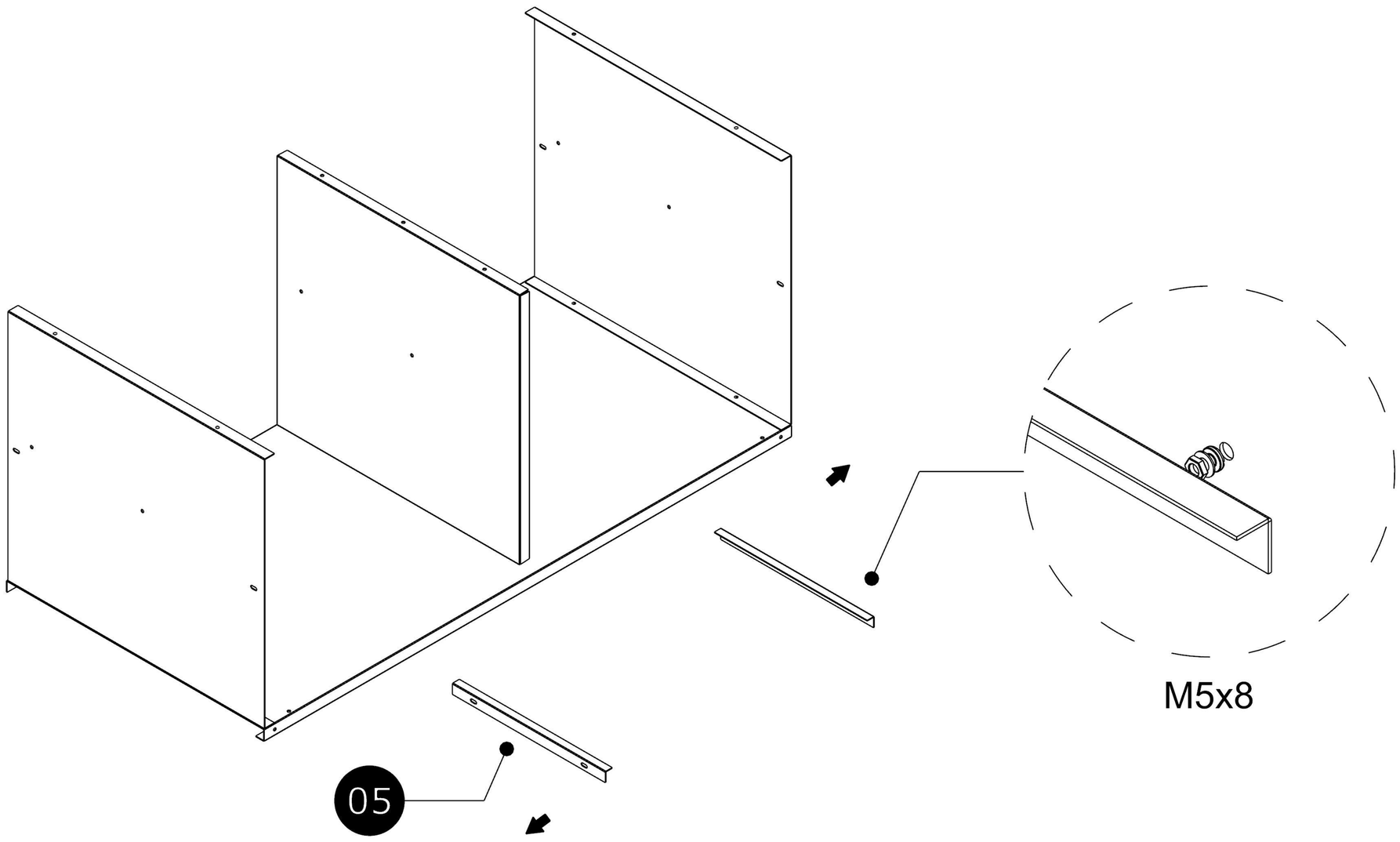

02

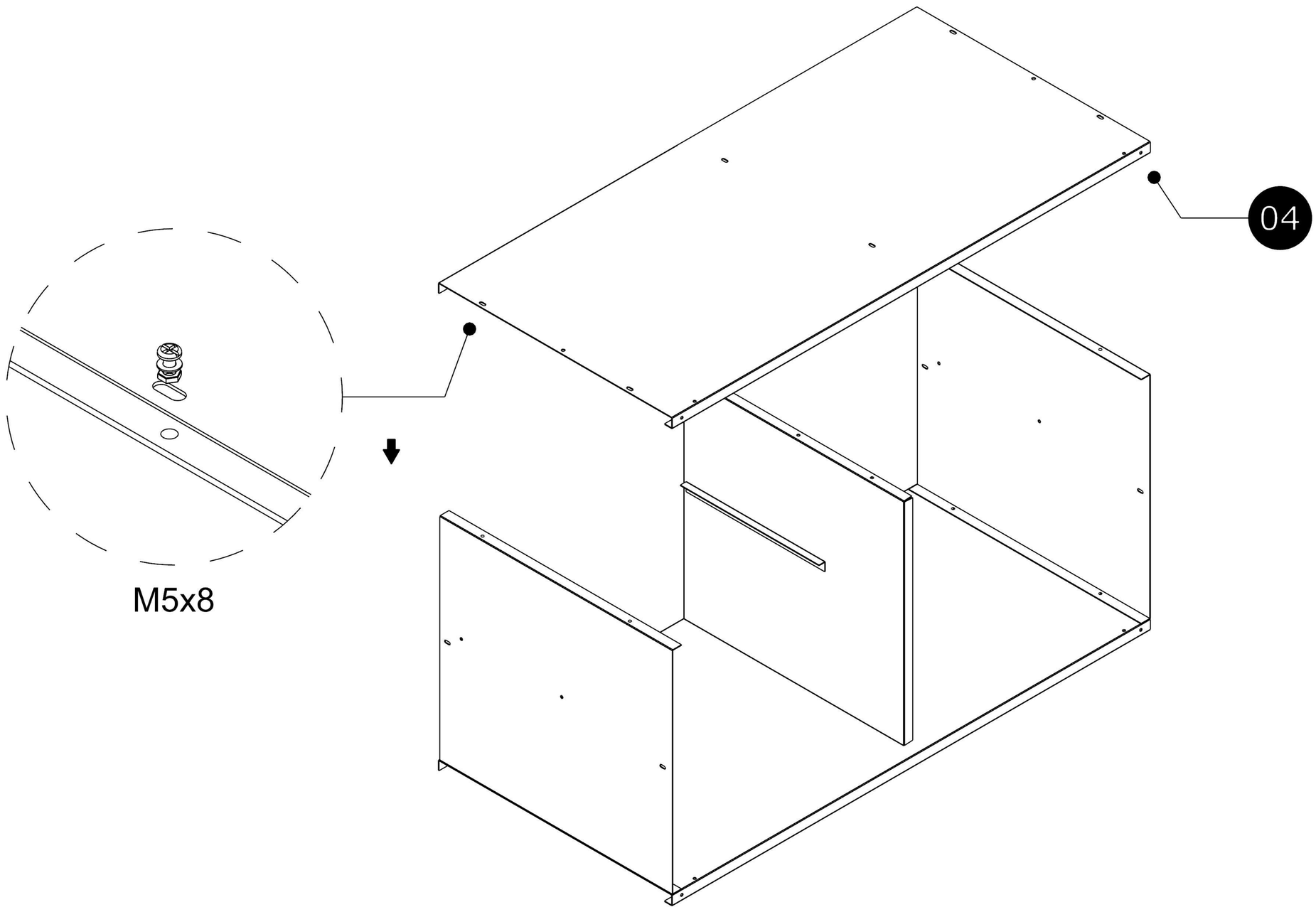
04
M5x8

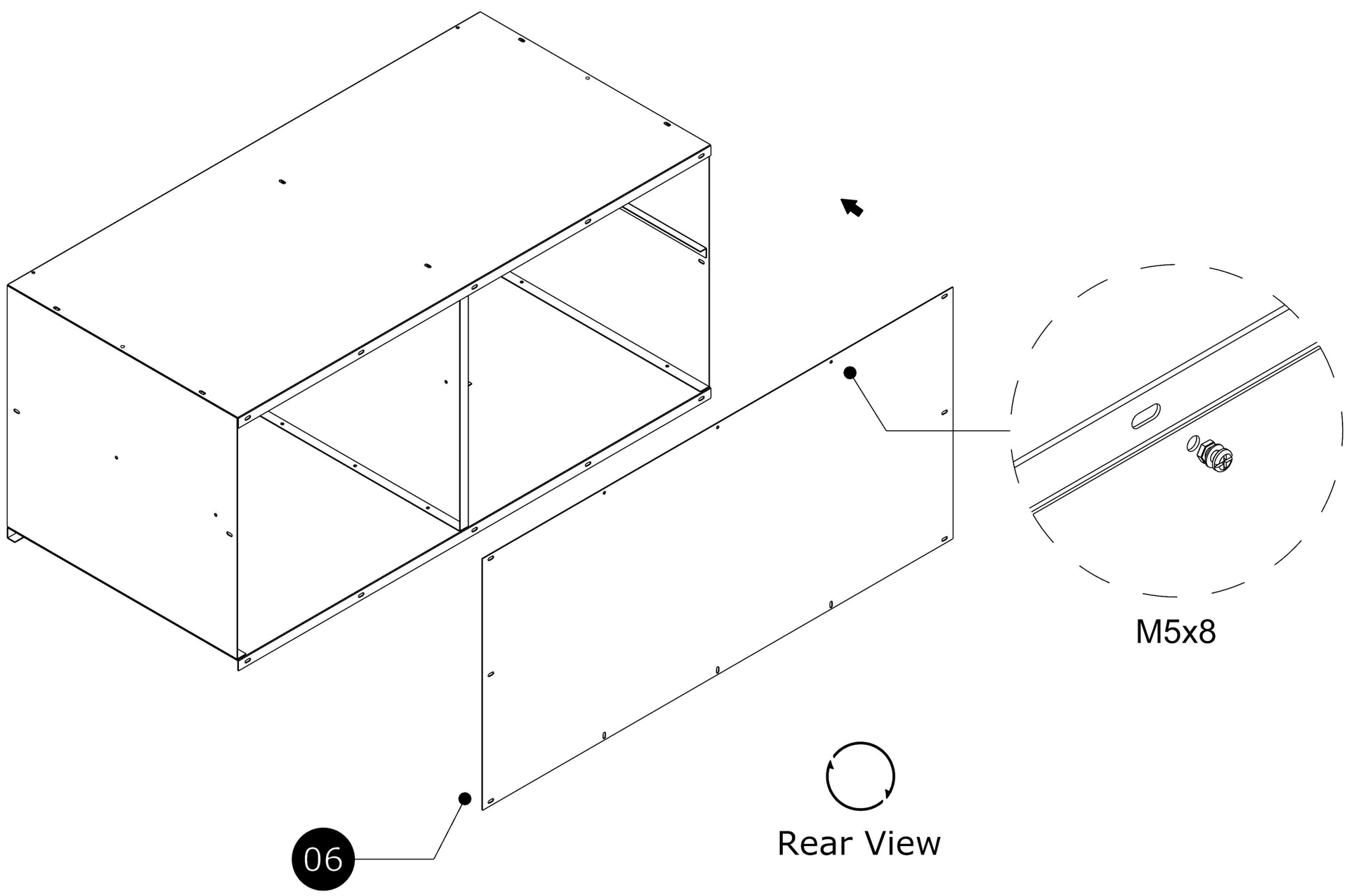
M5x8
06
Rear View

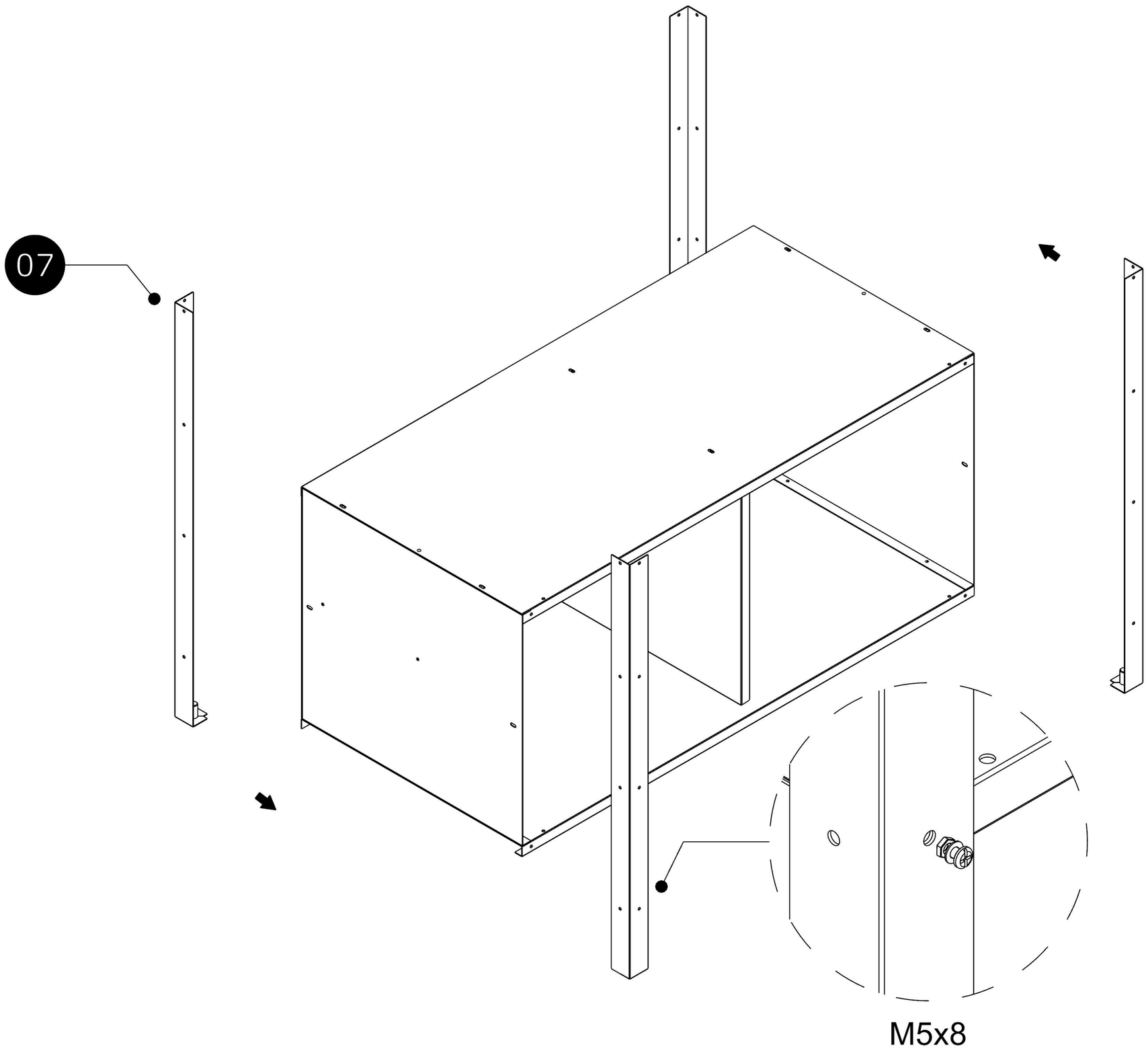
07
M5x8

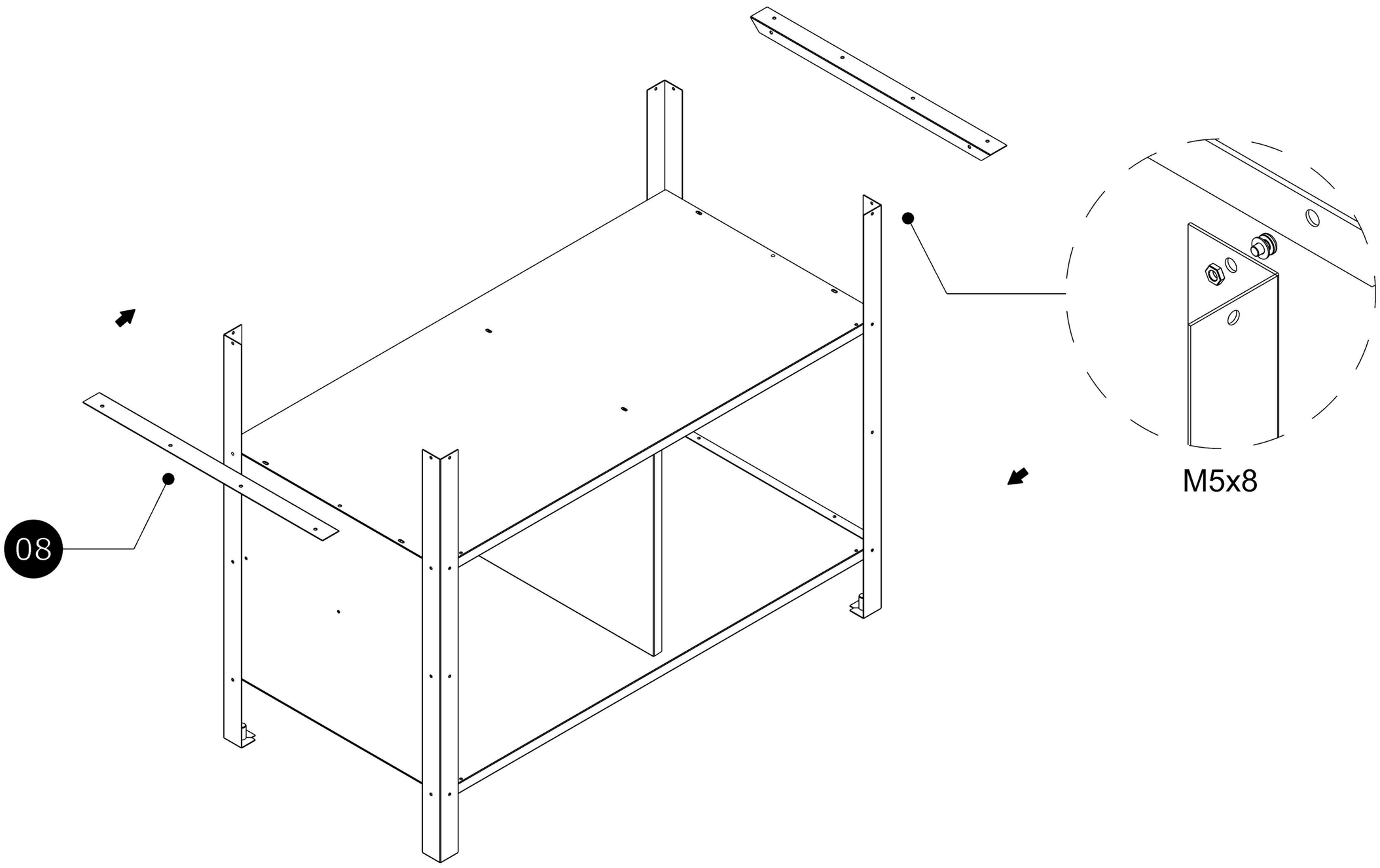
08
M5x8

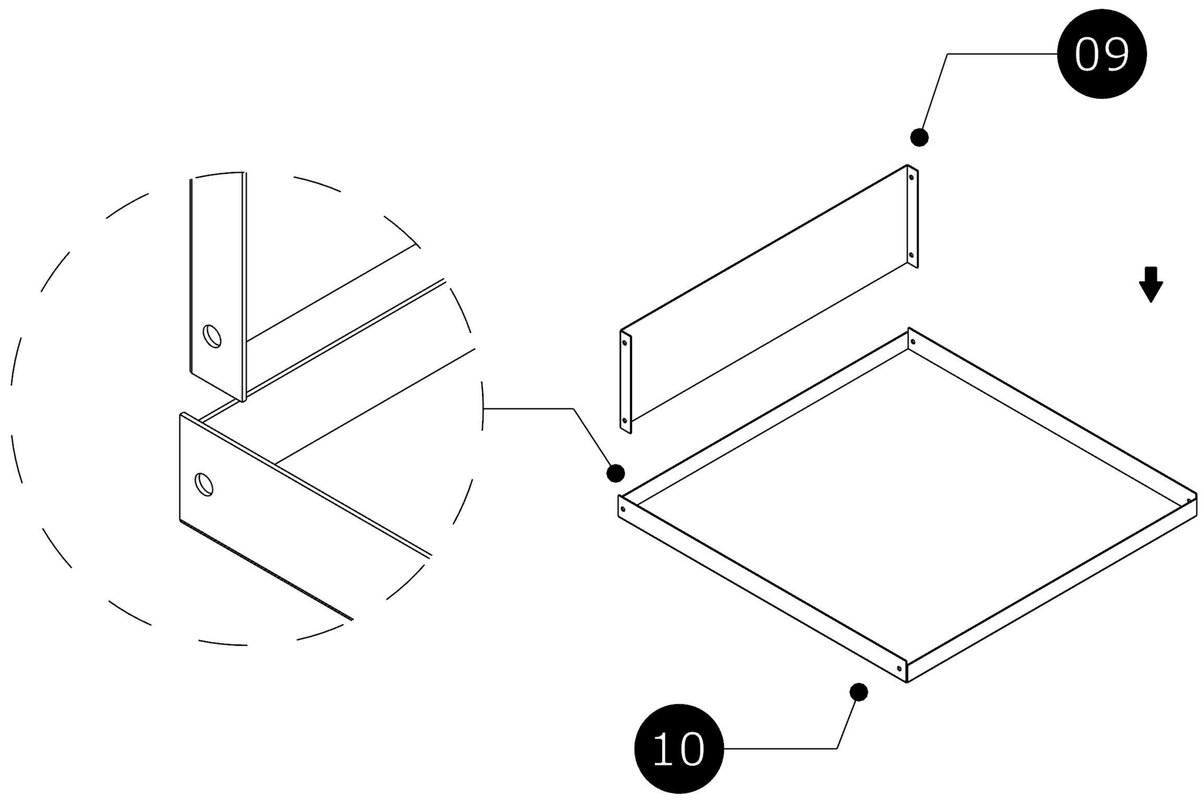

07

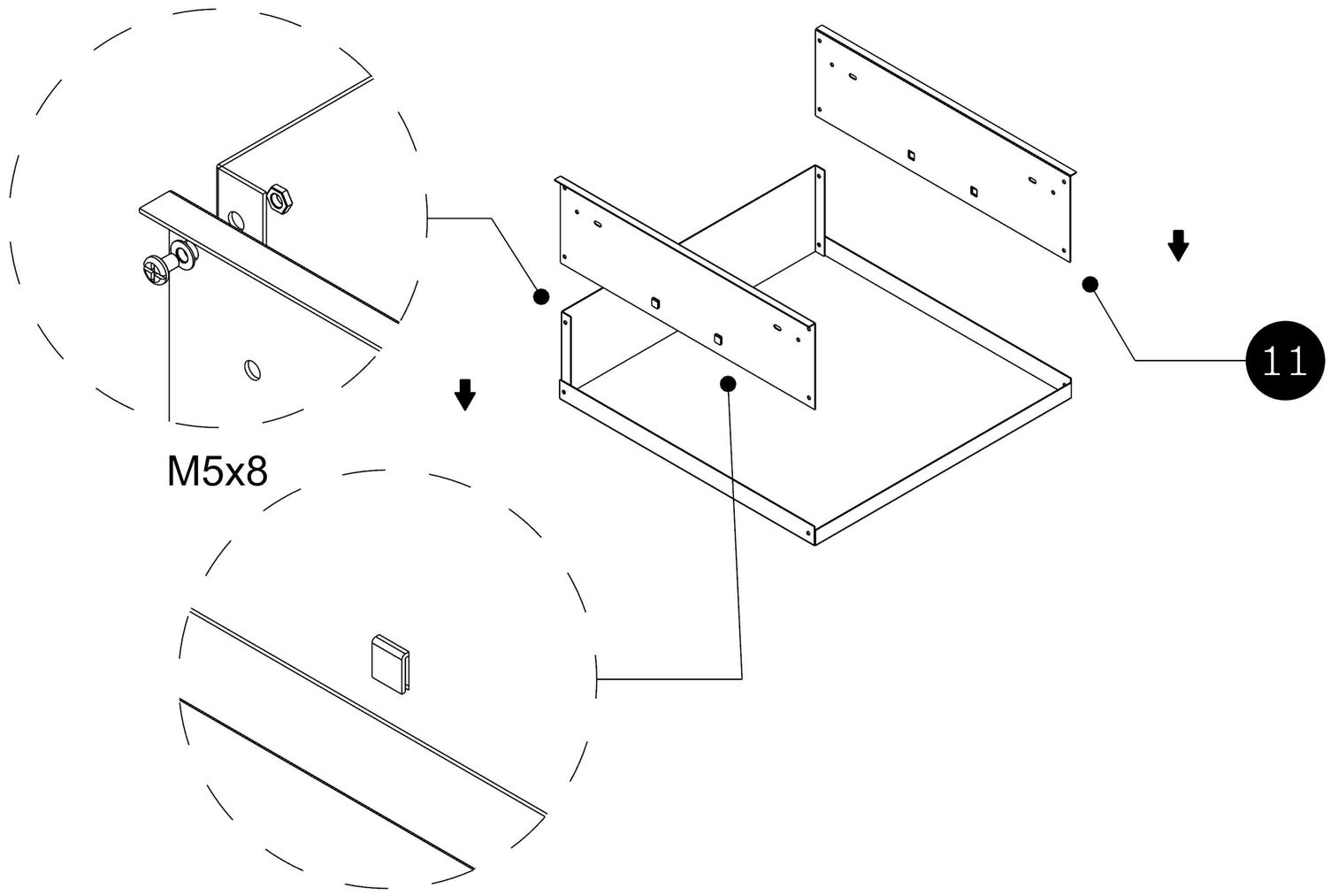

08

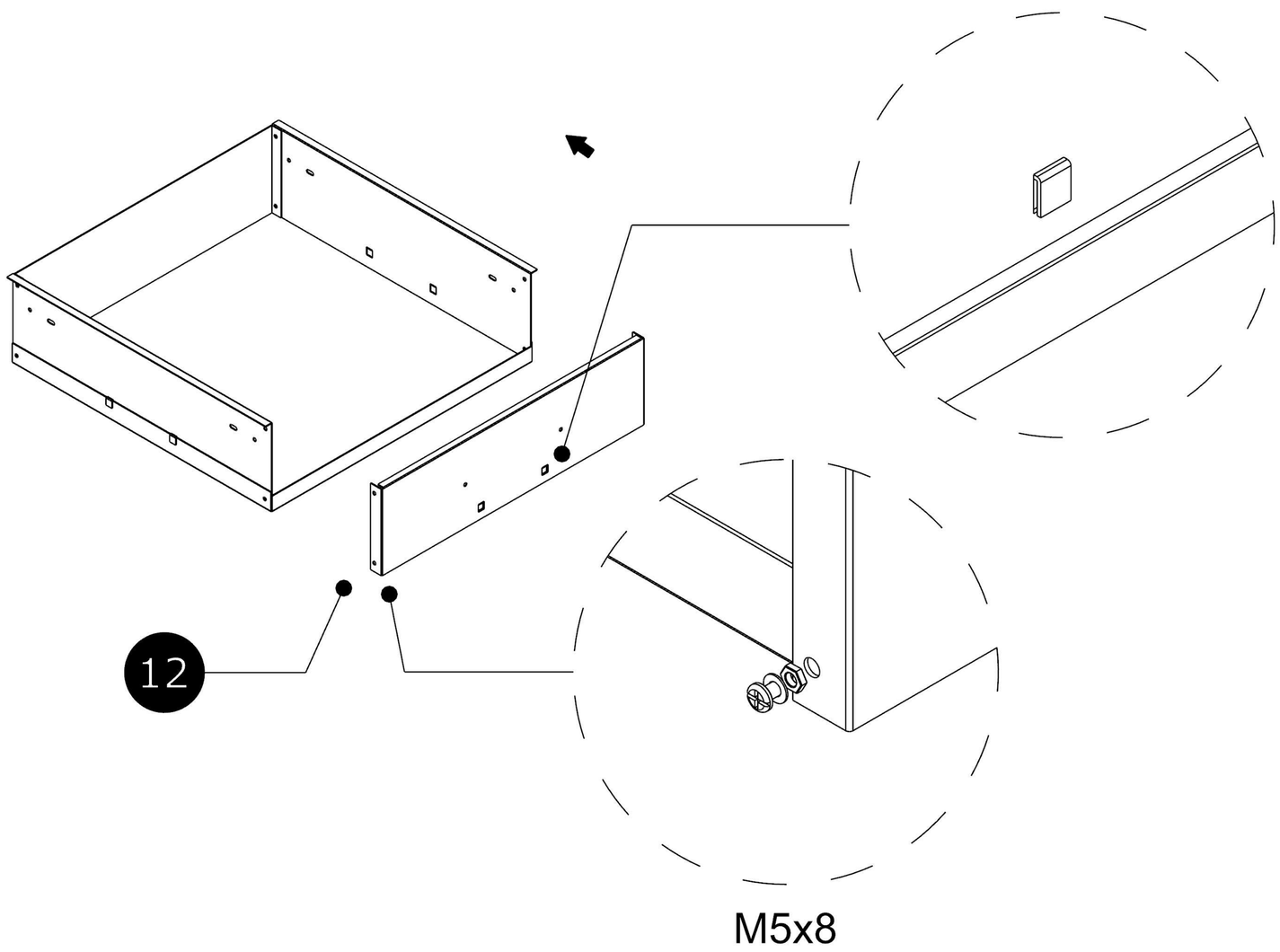

09

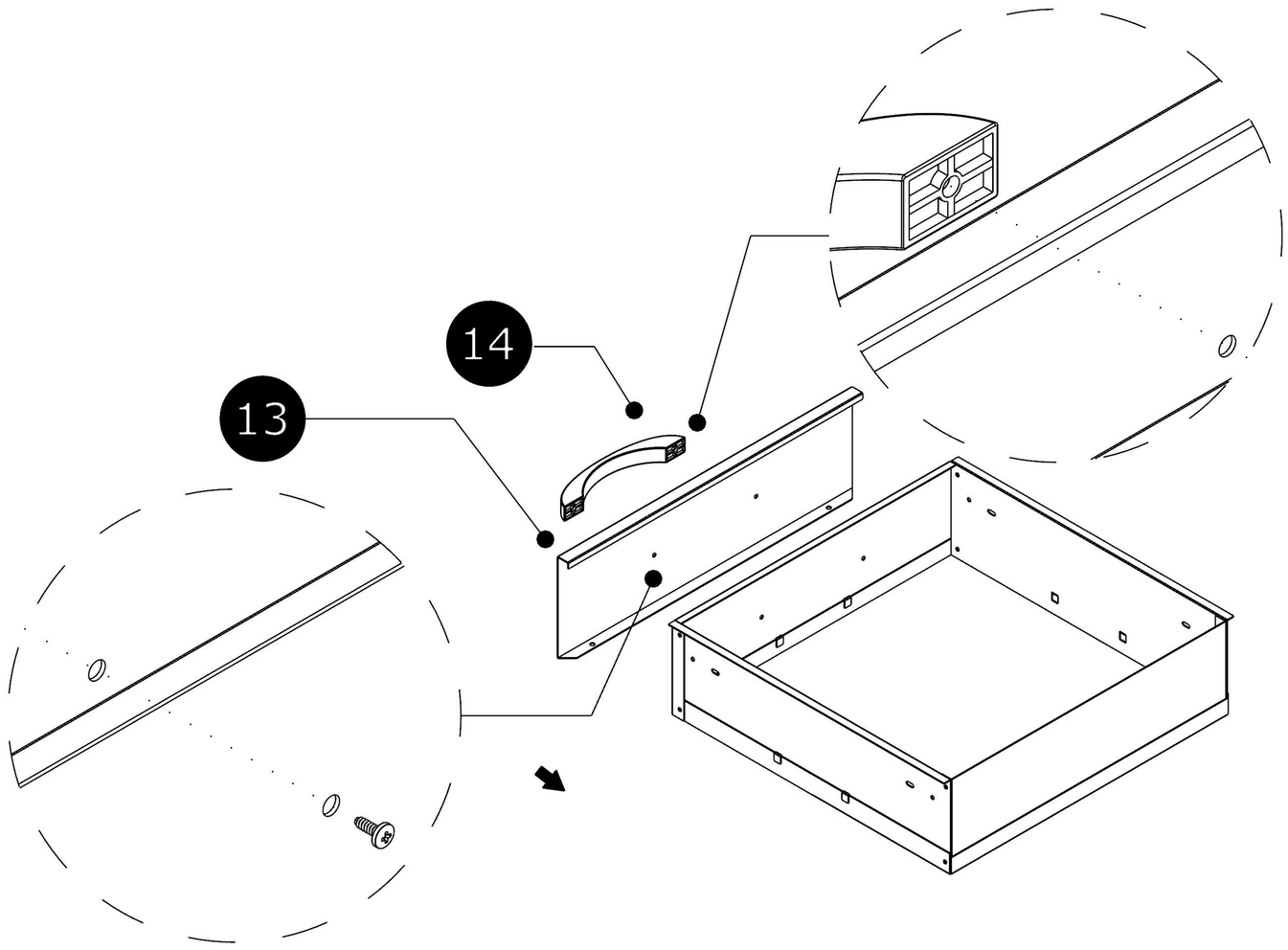

5x16

10

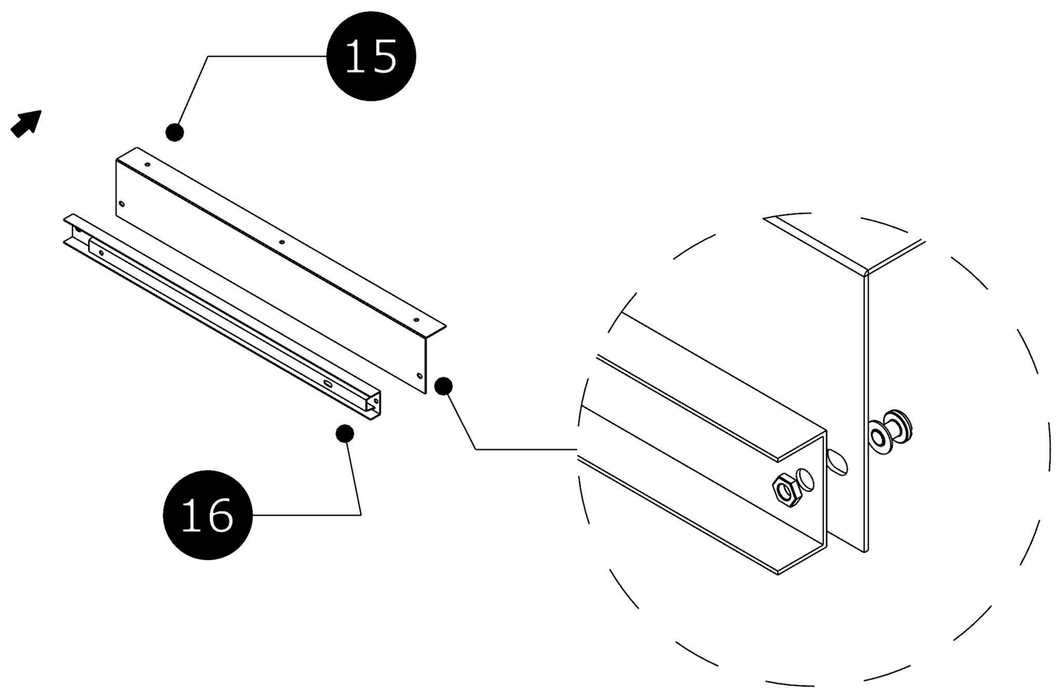

M5x8

11

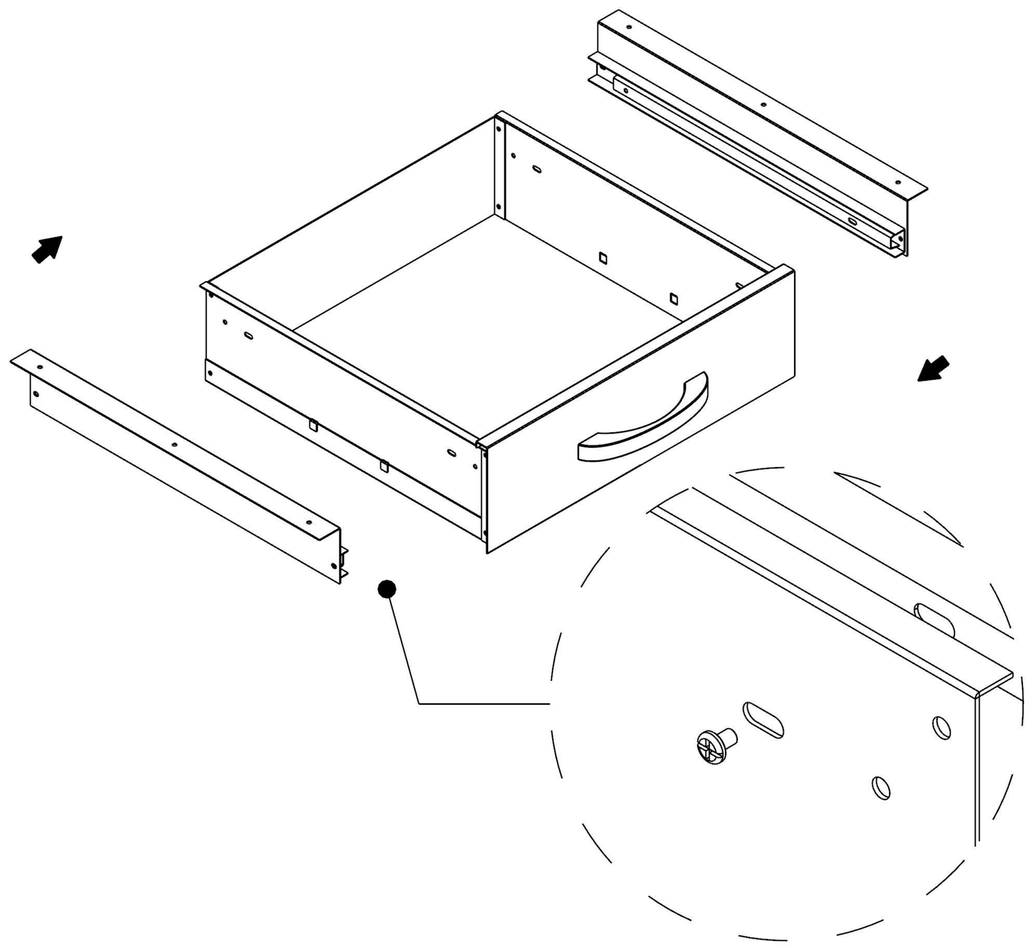

M5x6

12

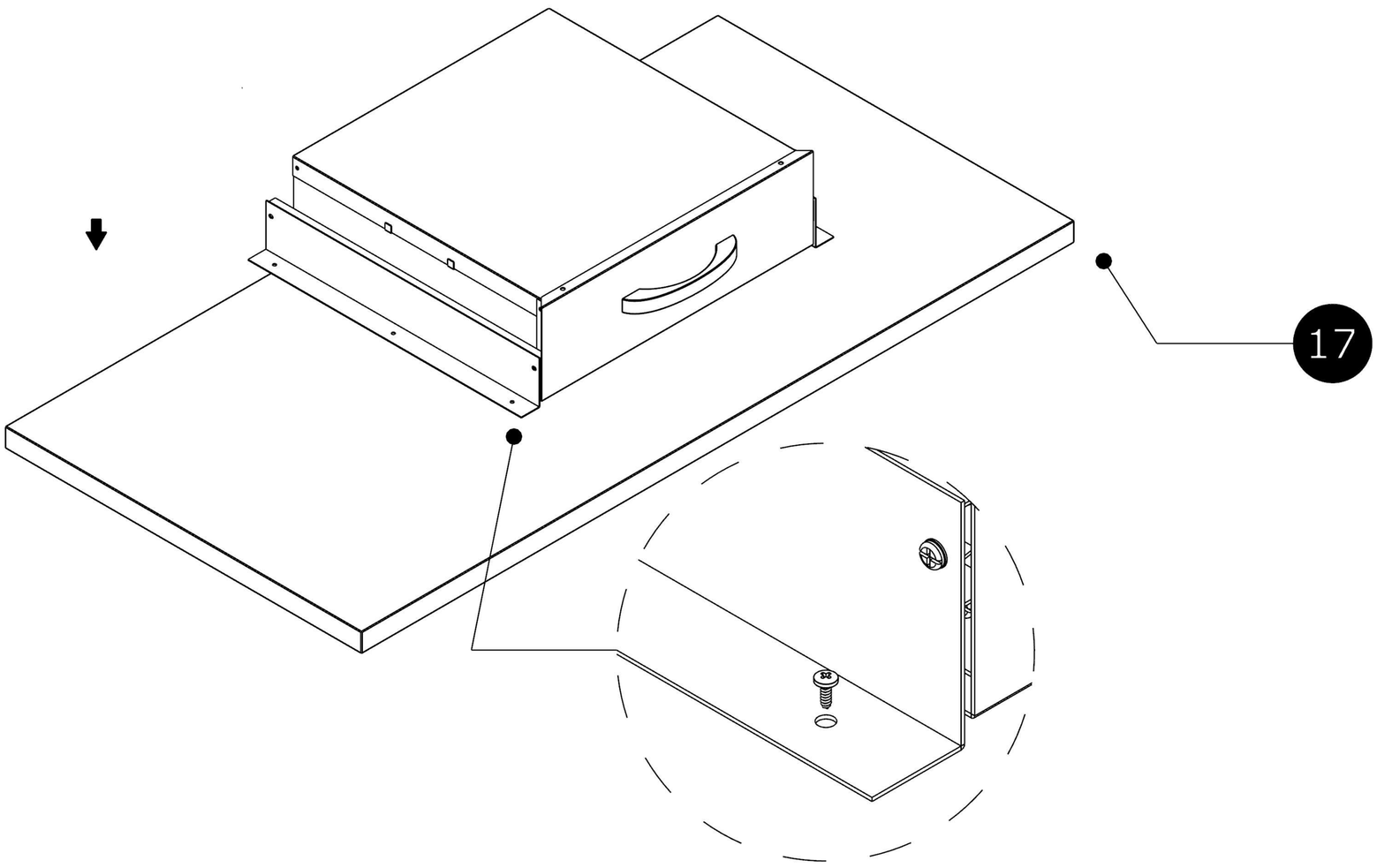

5x16

13

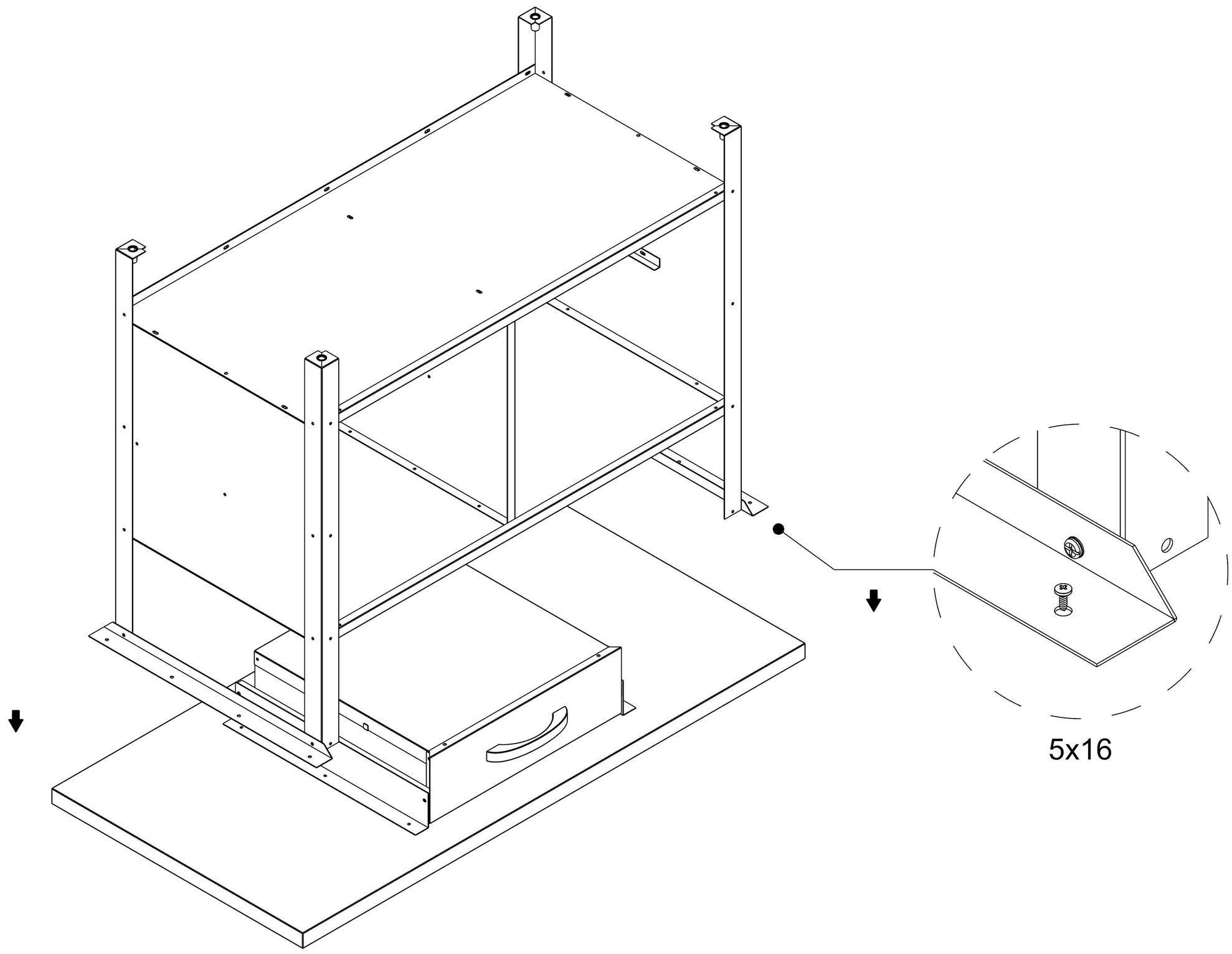
5x16

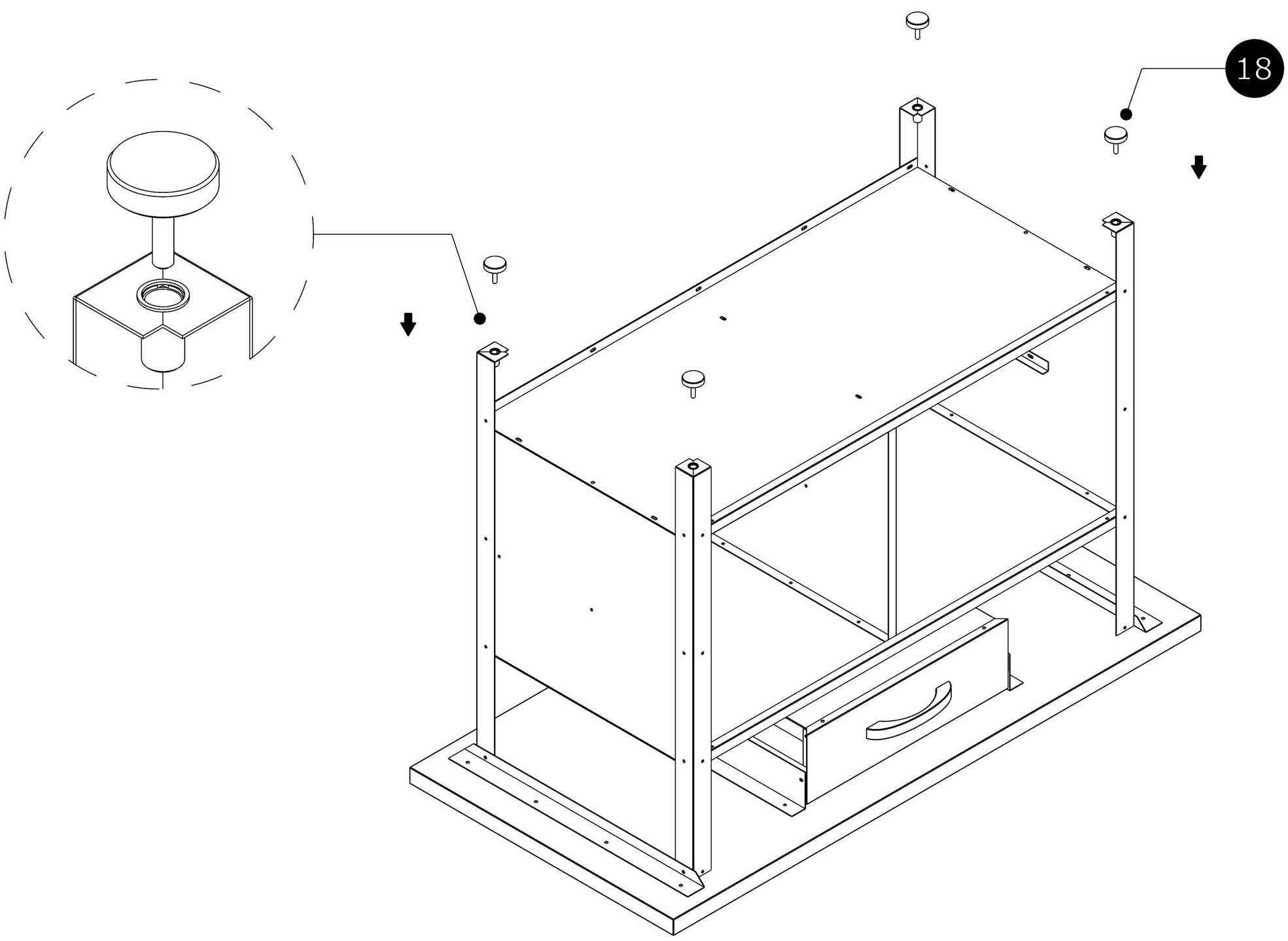
18

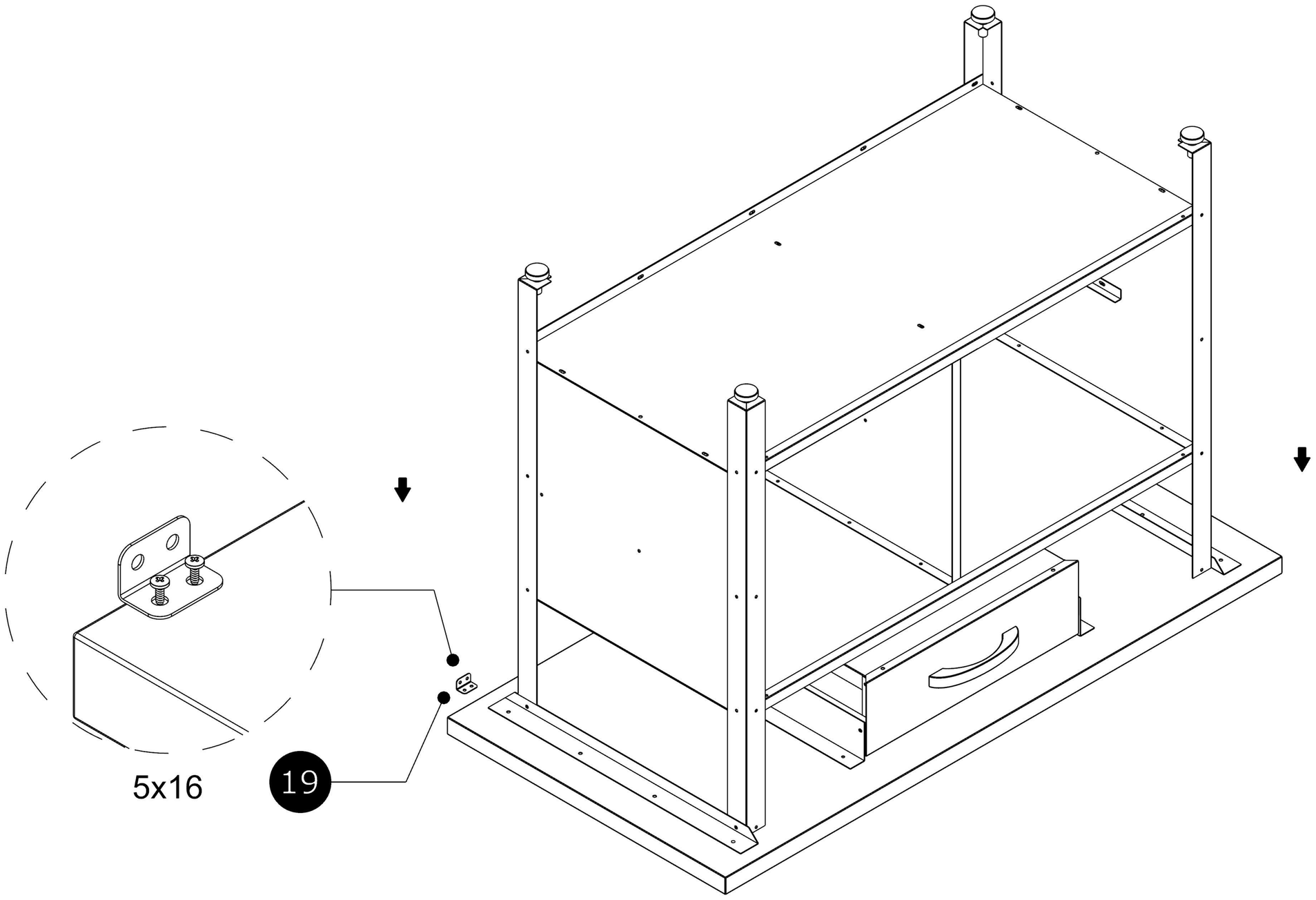
5x16
19

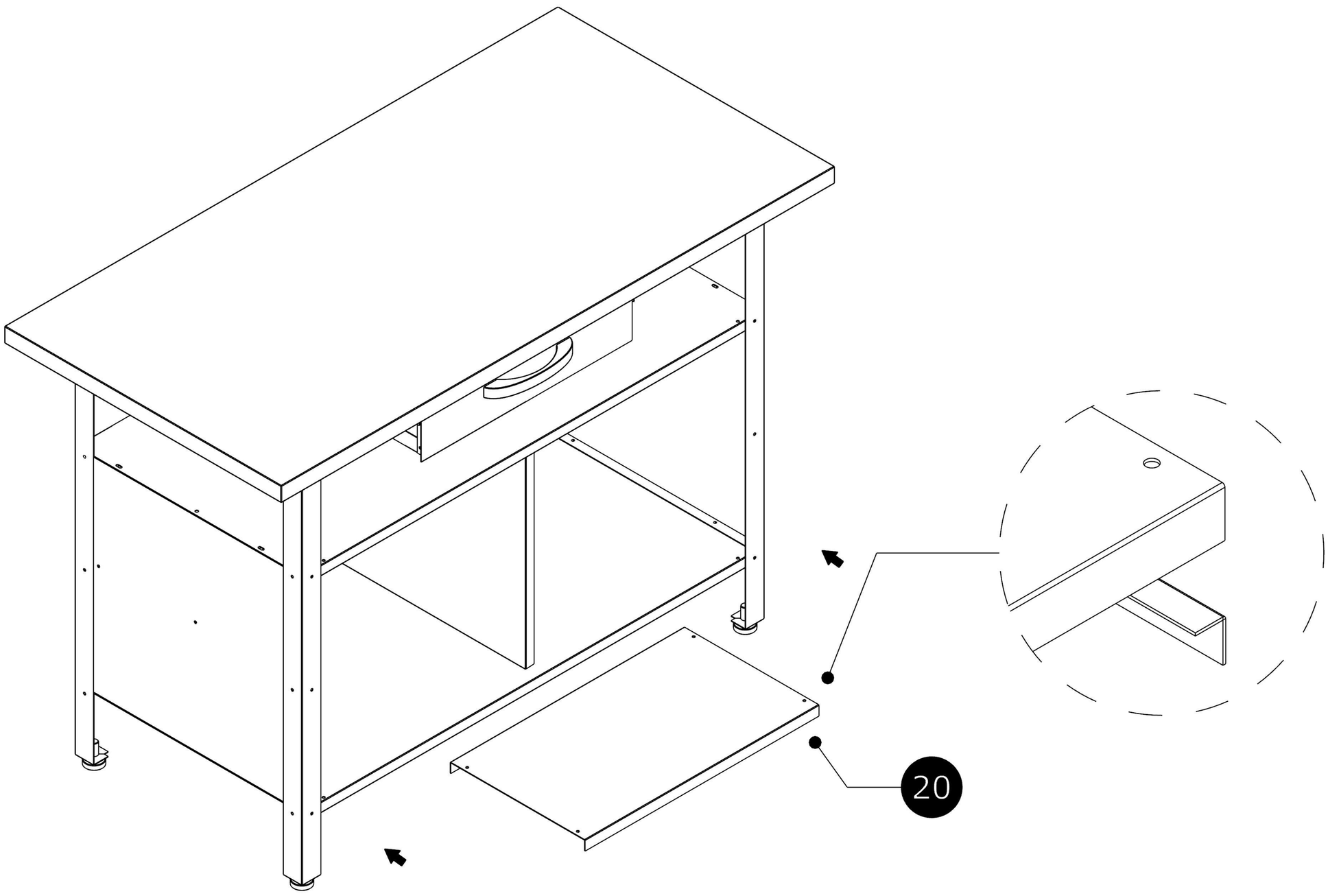
20

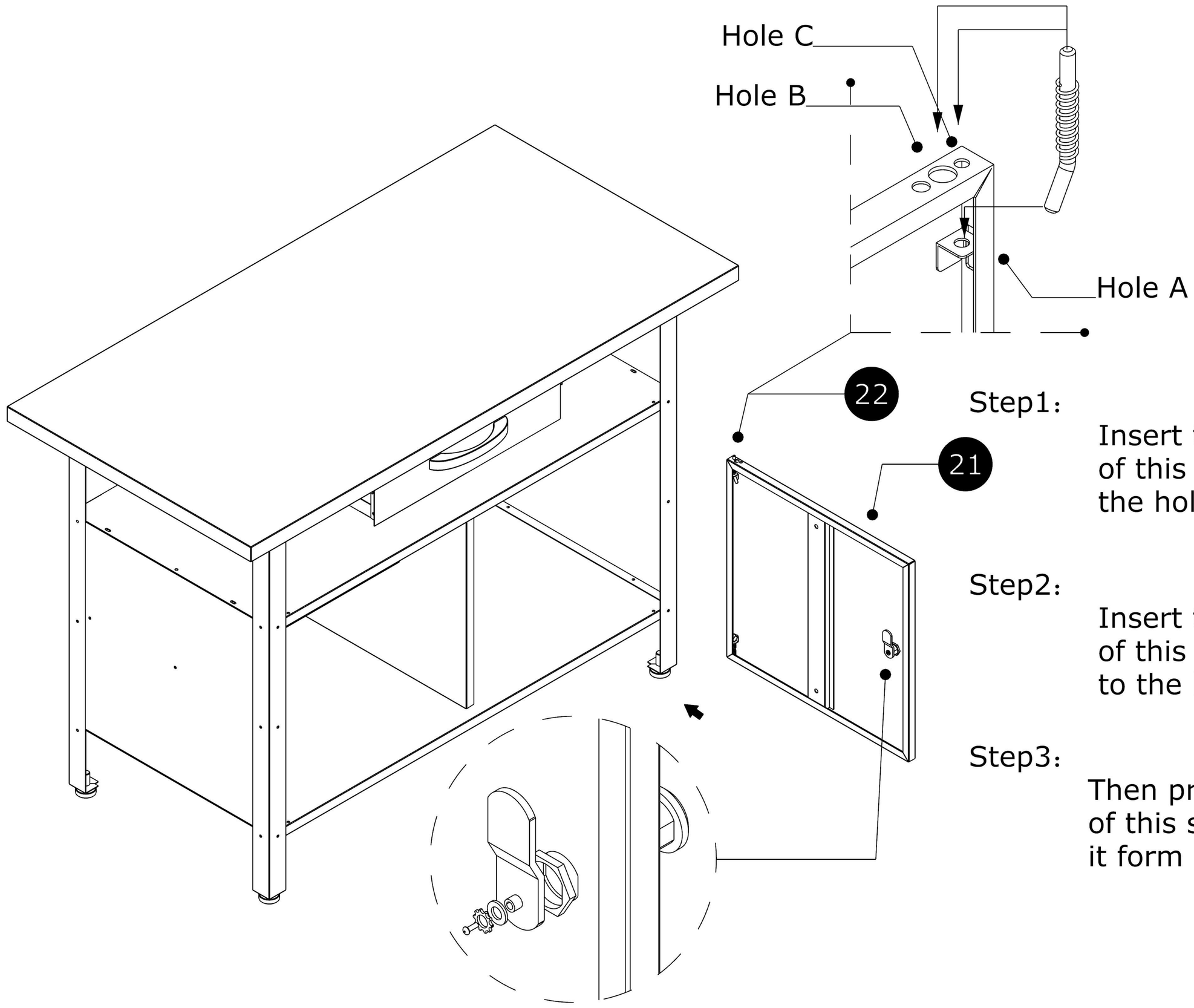

Step1：

Insert the down side of this door spindle to the hole A .

Step2：

Insert the upward side of this door spindle to the hole B

Step3：
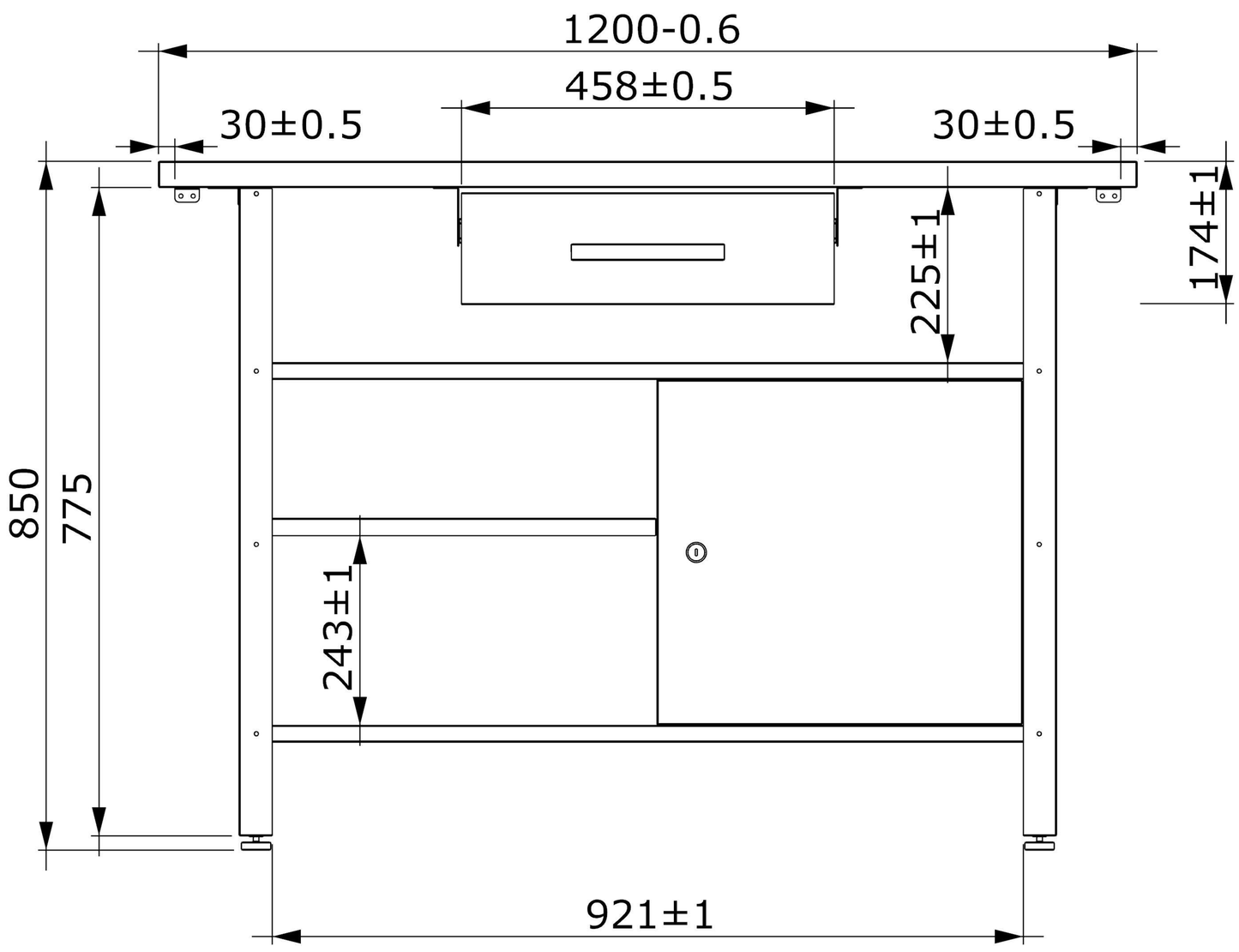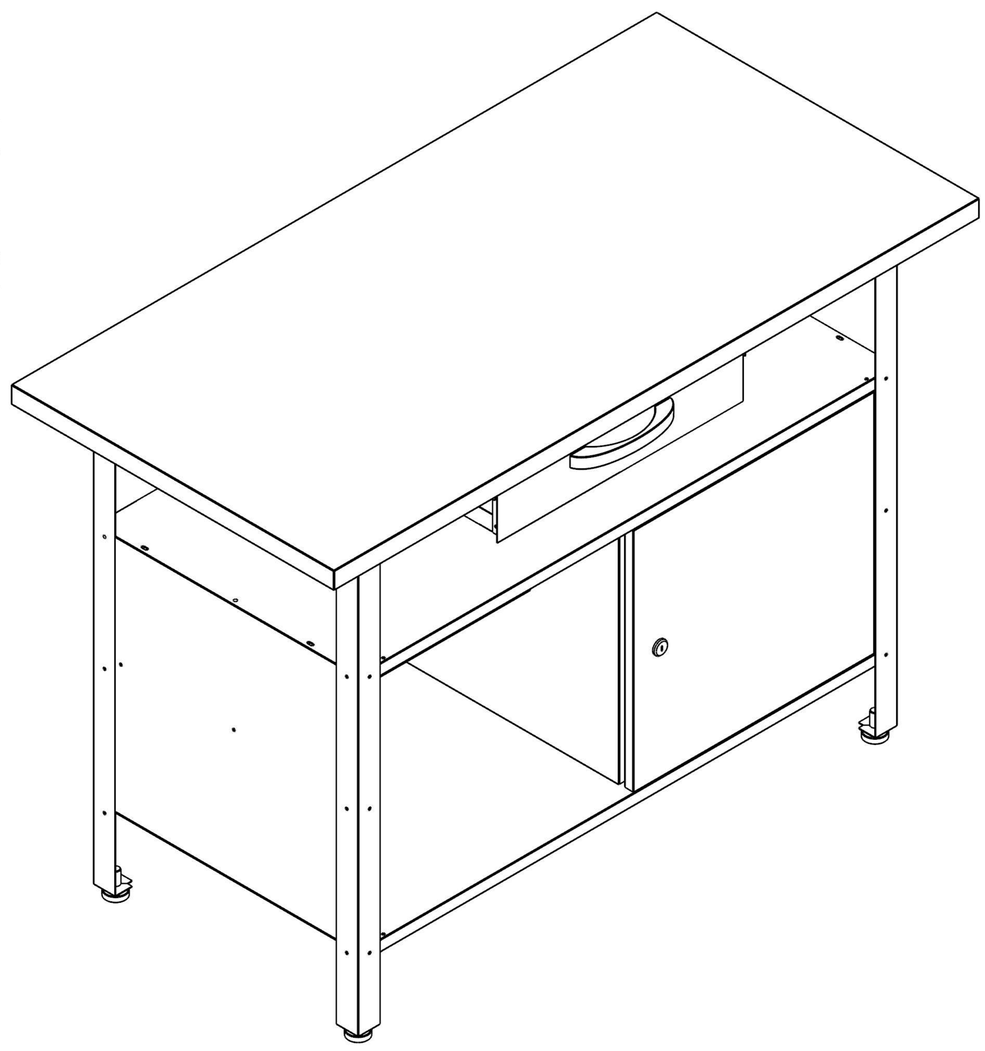
Then press the upward side of this spindle and remove it form hole B to hole C