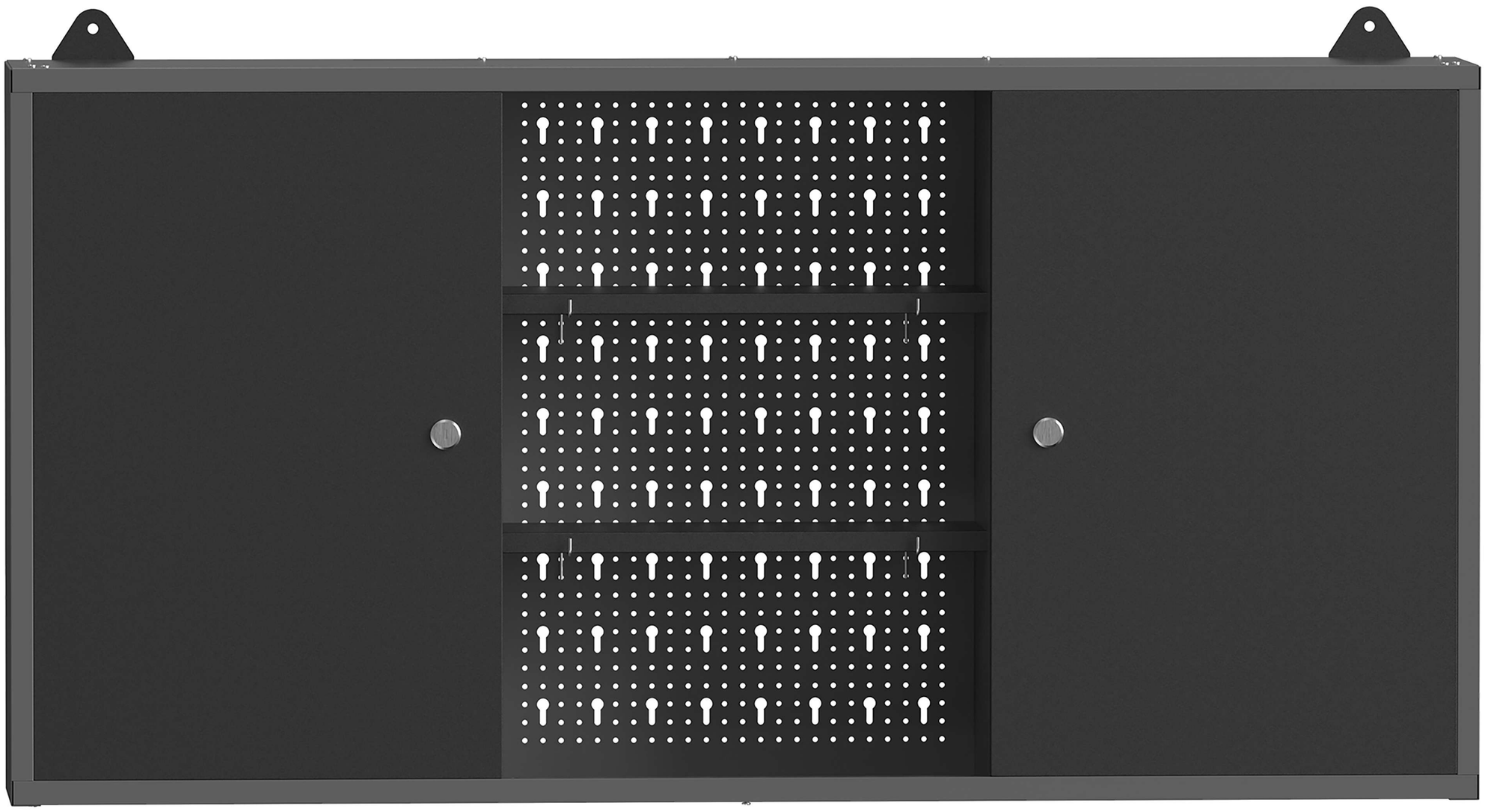

Assembly Instructions

TC-003

Adexa Direct Limited,
Unit 1 Swift Point, Cosford
Lane Swift Valley Ind Est
Rugby CV21 1QN

https://adexa.co.uk

E-mail: service@adexa.co.uk
Tel: 01483 931040

Bill of Material

No.	Parts	Dimension in mm （LxWxD）	Quantity
01	Side Board	598x198x27	2
02	Middle Side Board	598x182x18	2
03	Back Board	596x398x15	3
04	Bottom /Top Board	1197x200 x18	2
05	Clapboard	396 x140 x15	2
06	Supporting Frames	φ4	4
07	Door	561x380x15	2
08	Hanger	90x68x22	2

Explosive Drawing

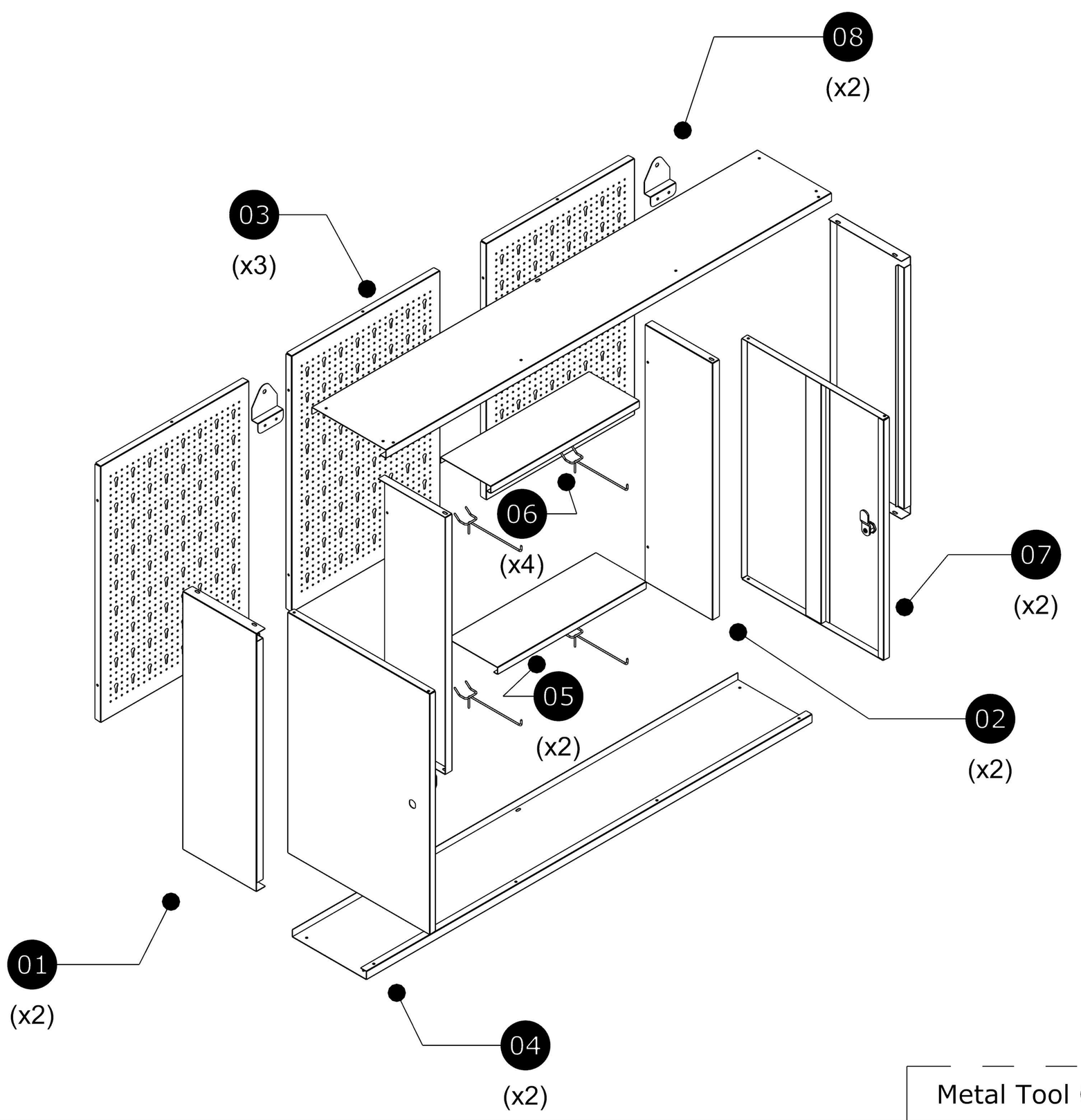

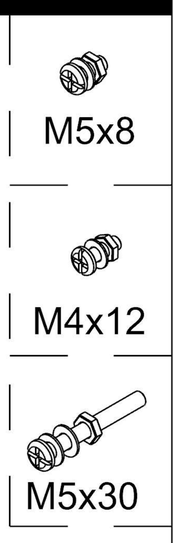

Metal Tool Cabinet with 2 Doors Detail

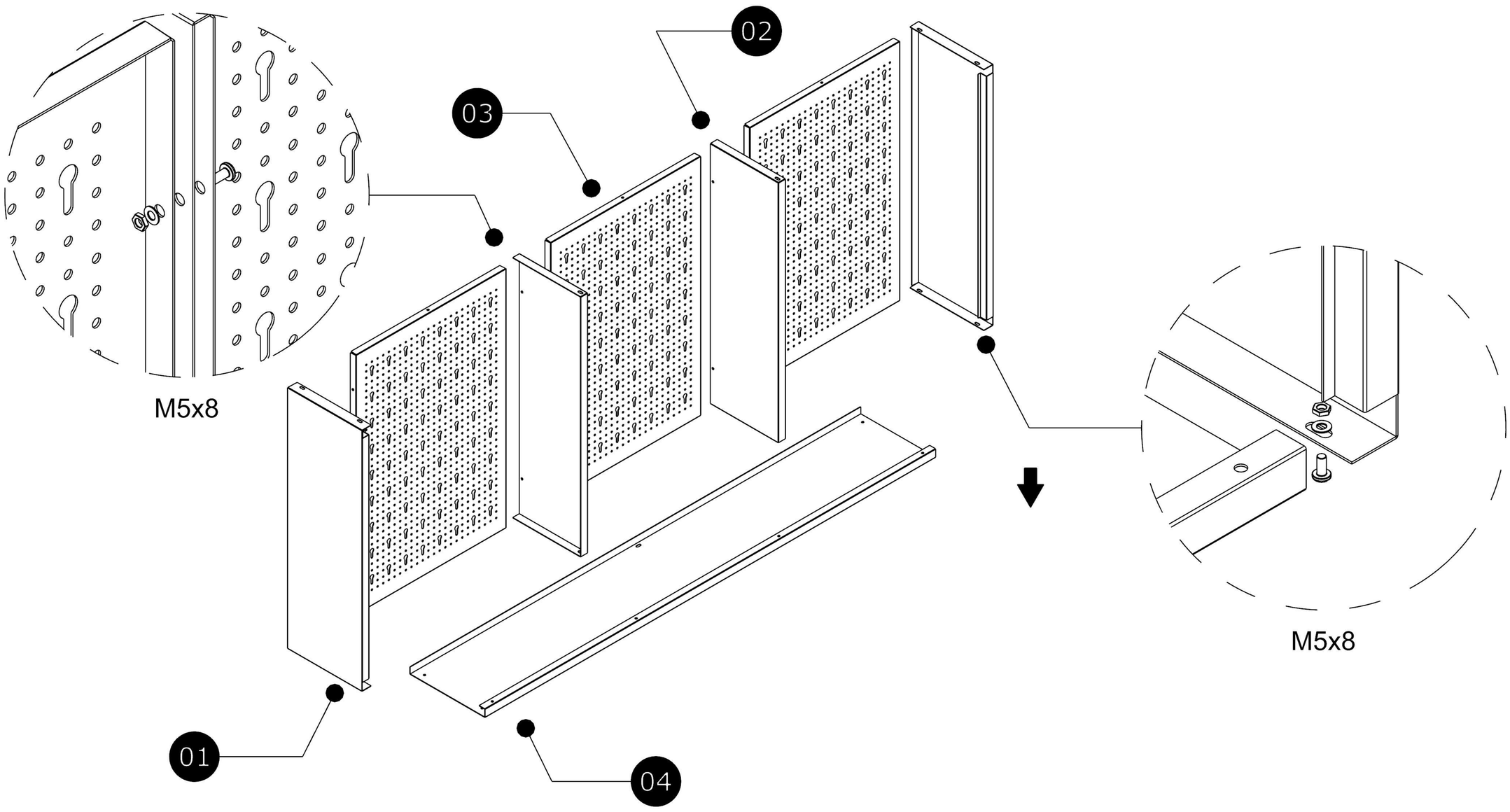
02
03
M5x8
M5x8
01
04

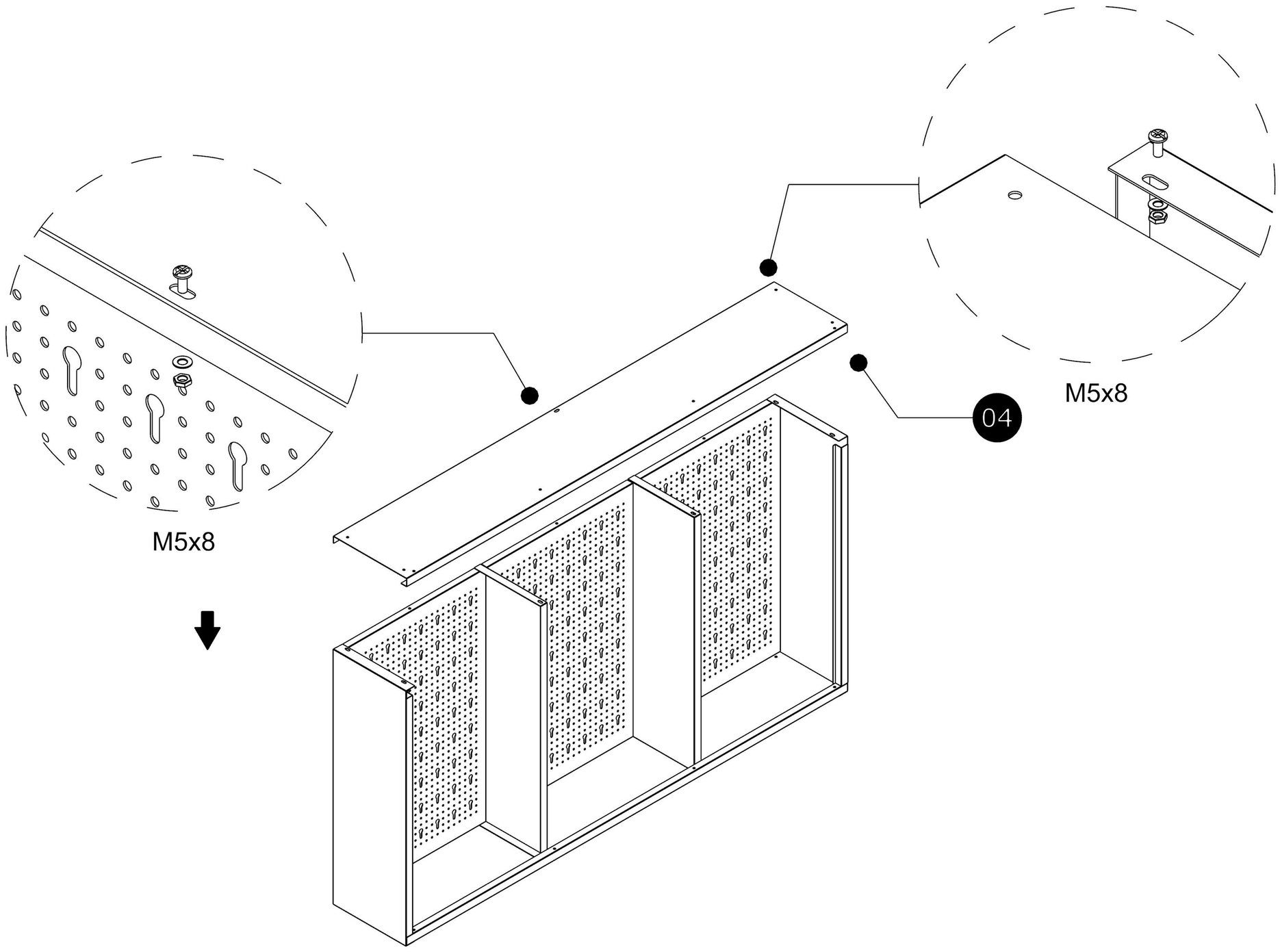
M5x8
04
M5x8

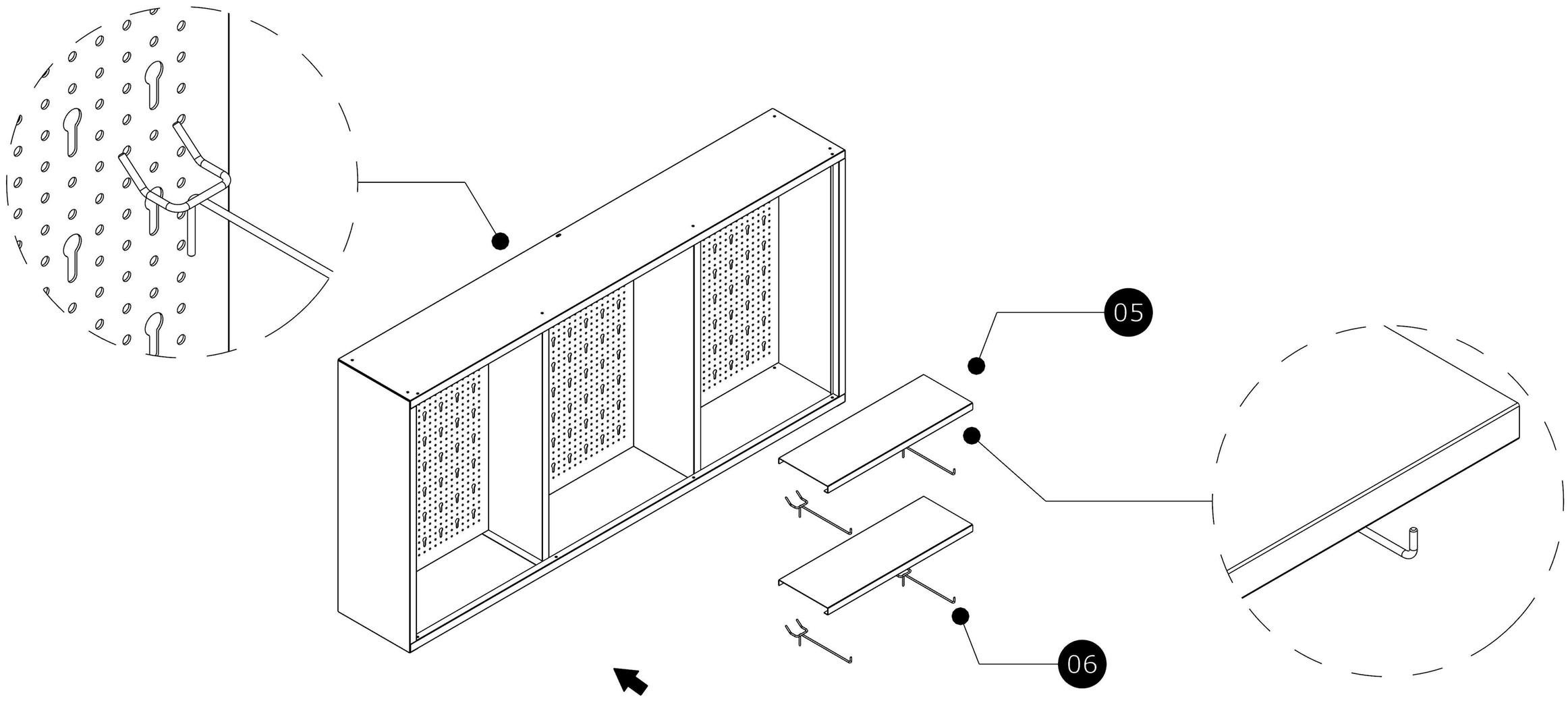
05
06

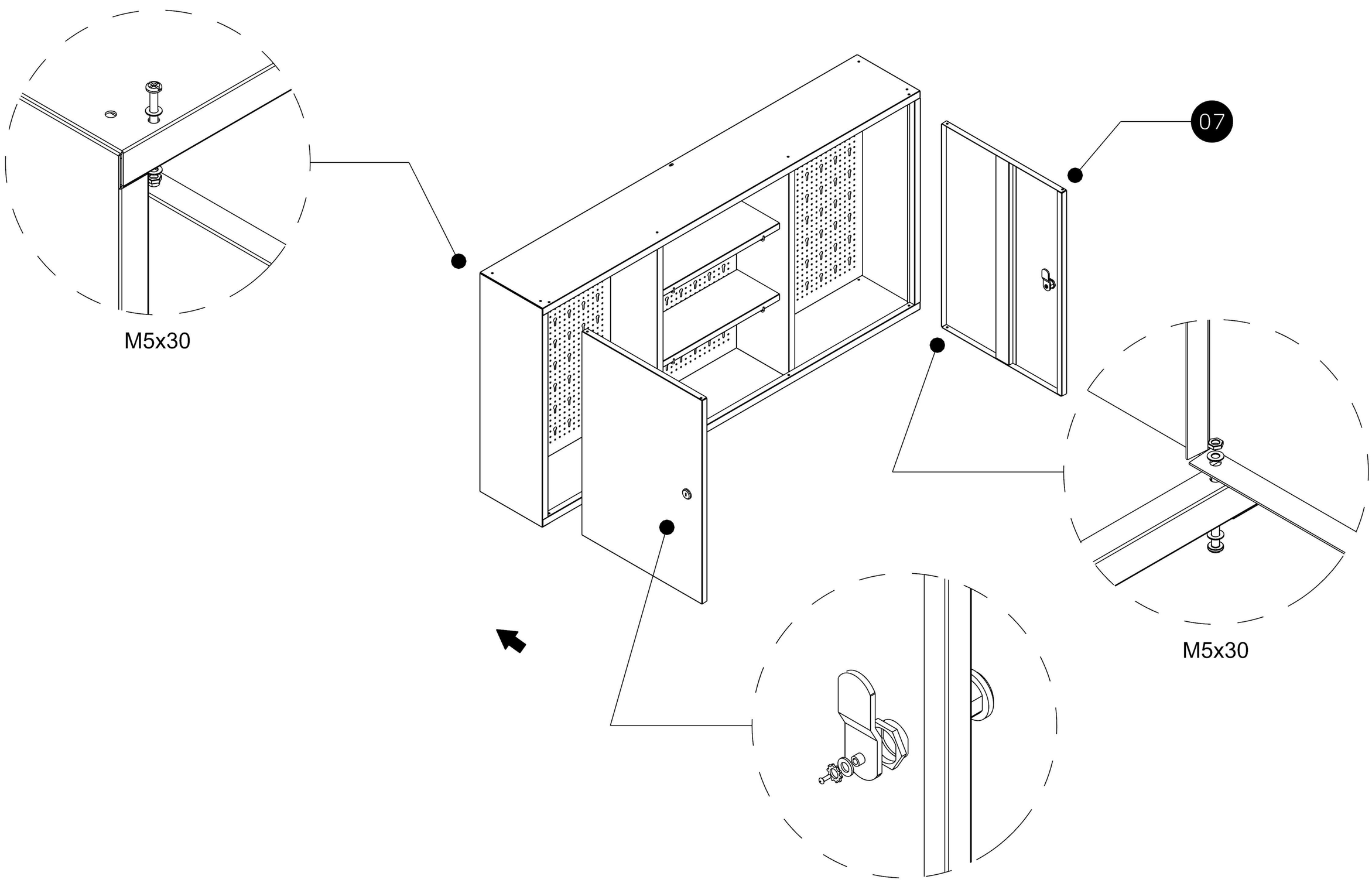
M5x30
07
M5x30

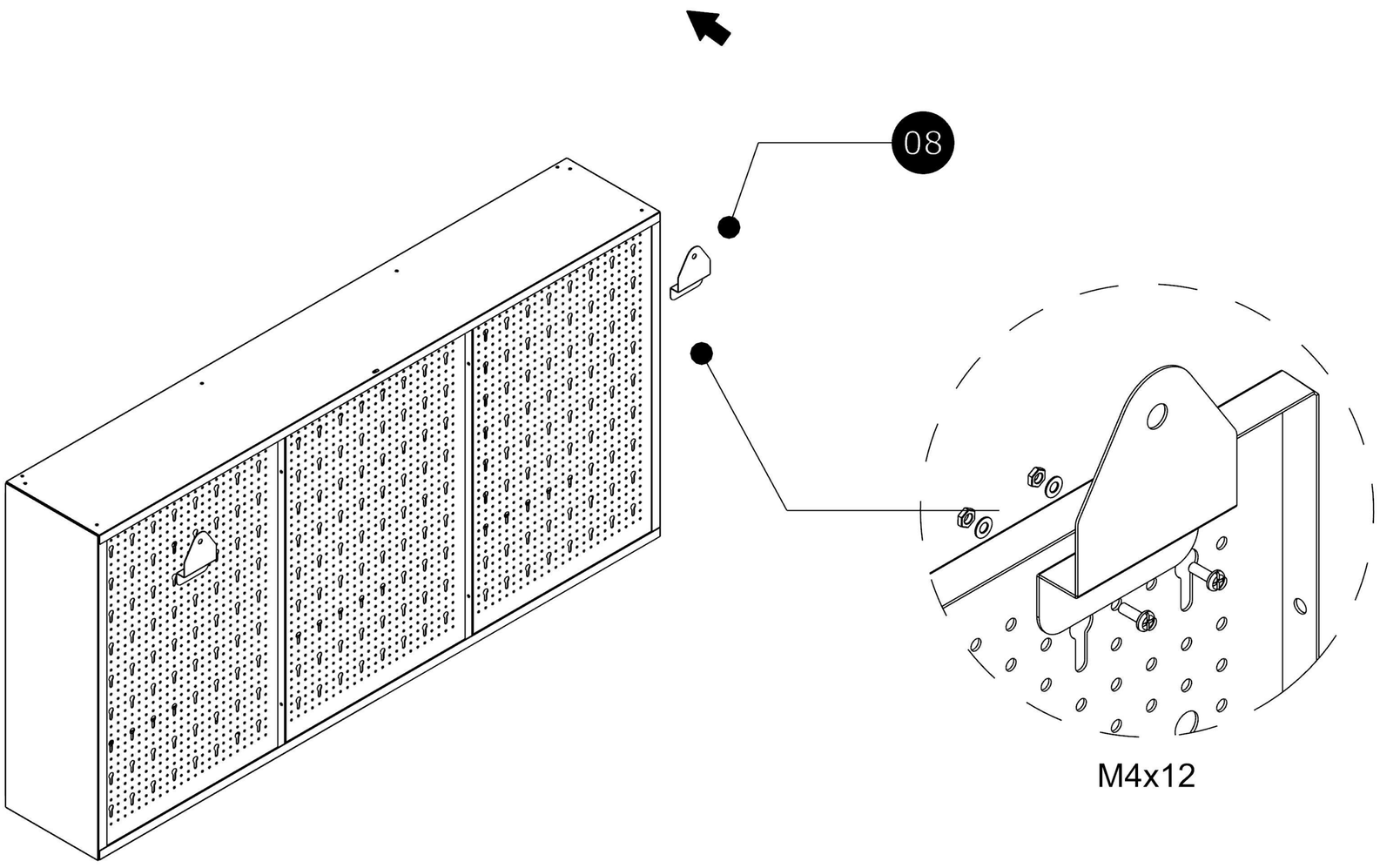
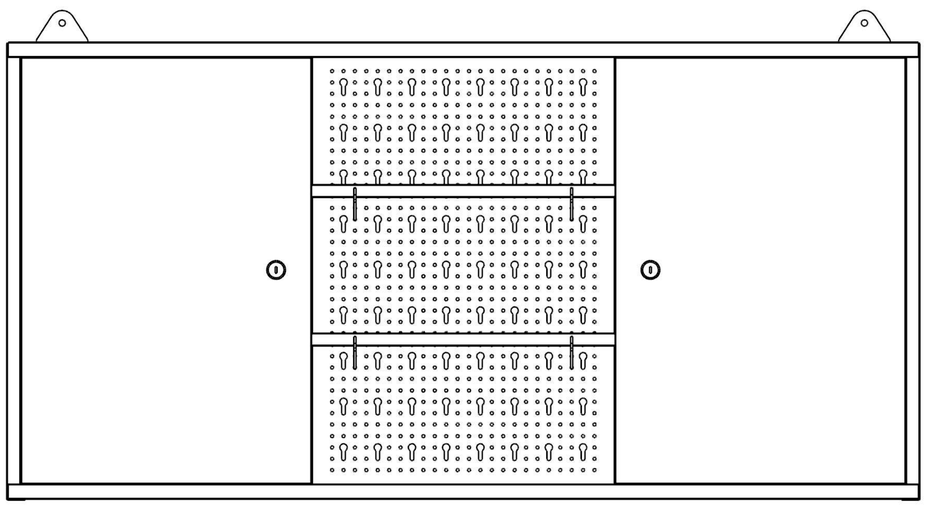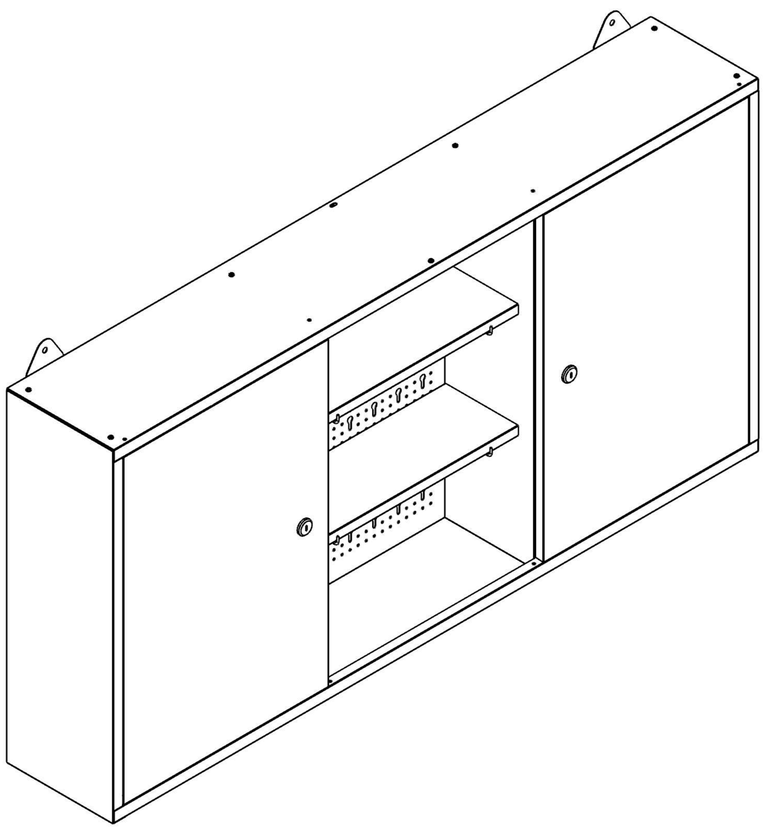
Finish