图号	G50-B01

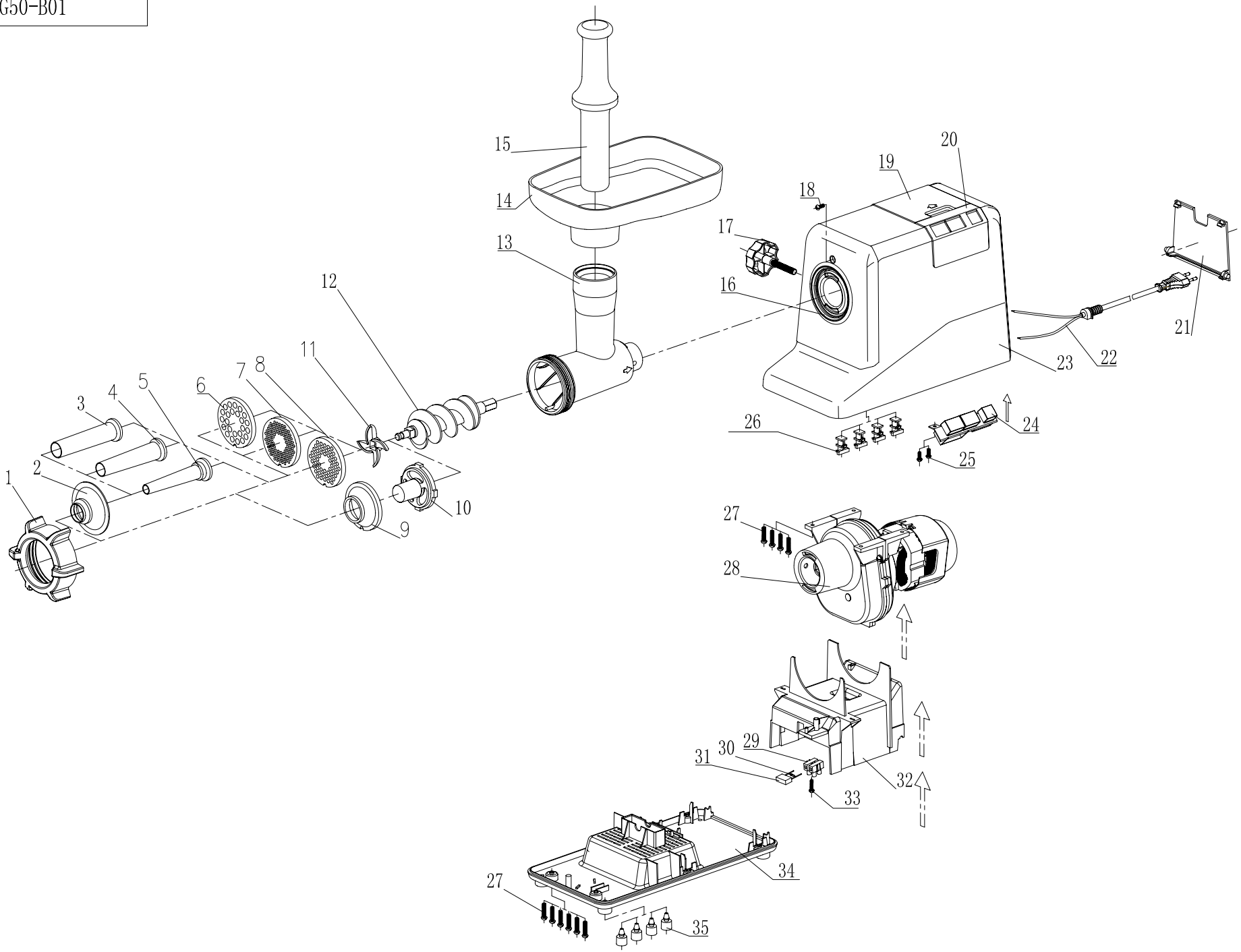

装

订

位

SM-G50爆炸图附清单（Parts list of SM-G50 Meat Grinder）

版本：A1　第1/2页

序　号 Sequence No.	零件编号 Part No.	Part Name (English Name)	零件名称 (Chinese Name)	单机数量 (Quantity)
1	G503005	Cap	G50大螺帽	1
2	G503901	Sausage maker tie-in	G50灌肠器接口	1
3	G203811	Sausage maker (large)	灌肠器大号	1
4	G203812	Sausage maker (medium)	灌肠器中号	1
5	G203813	Sausage maker (small)	灌肠器小号	1
6	G503600	Cutting plate (coarse)	RG503600 筛片Φ8	1
7	G503400	Cutting plate (fine)	RG503400 筛片Φ3.5	1
8	G503500	Cutting plate (medium)	RG503500 筛片Φ5	1
9	G503102	Kubbe attachment A	G50挤出套	1
10	G503103	Kubbe attachment B	G50大挤出头	1
11	G503006	Cutting blade	防反装刀片	1
12	G503300-Z	**Feed screw assembly**	G50螺旋组合	1
13	G503200	Head	大铝筒（	1
14	G503004	Hopper plate	大铝料斗	1
15	G503001	Food pusher	压料棒	1
16	G502007	Opening	面盖	1
17	G202200	Locking knob	手把	1
18	R-镀铬V形头4×10	Self-tap bolt 镀铬V形头4×10	R-镀铬V形头4×10	1
19	G503002	Coping	大顶盖	1
20	G502201	Switch panel	小顶盖	1
21	G502004	Cord compartment cover	藏线盖	1
22	G301E03	Supply cord	欧洲两圆插1.5米白色	1
23	G502001	Motor housing	外壳	1
24	G502100	Switch	开关装配件	1
25	自攻钉4×10	Self-tap bolt 4×10	自攻钉4×10	2
26	G502005	Bolt seat	螺丝座	4
27	自攻钉4×10	Self-tap bolt 4×10	自攻钉4×10	10
28	G501000-DJ	Gearbox assembly	G50齿轮箱总成(带电机)	1
29	端子套PA10FDS	Terminal block PA10(Only for G50-EMC)	端子套PA10FDS	1
30	RT1MJ2E(1MΩ 1/4W)	Resistance 1MΩ0.25W(Only for G50-EMC)	R碳膜电阻RT1MJ2E(1MΩ 1/4W)	1
31	MPX.22K275V×2	Capacitance 0.22μF(Only for G50-EMC)	R聚丙烯膜电容MPX.22K275V×2	1
32	G502003	Cord compartment	藏线室	1
33	3×20	Self-tap bolt 3×20	自攻钉3×20	1
34	G502002	Bottom board	G50底板	1
35	G502006	**Rubber underlay**	G50橡胶脚	4

	审核/日期：	批准/日期：