TECNOEKA SRL - VIA MARCO POLO, 11 - 35010 BORGORICCO - PADOVA - ITALY - TEL. +39 049 5791479 +39 049 9300344 - FAX +39 049 5794387 - E-MAIL: INFO@TECNOEKA.COM - WWW.TECNOEKA.COM - WWW.TECNOEKA.RU

EKTP 96 - 5 BURNERS GAS COOKER WITH INCORPORATED TABLE

EKA EVOLUTION LINE

COOKERS

The hob is a seamlessly integrated part of the steel stand with shelf and has 5-gas-burners featuring safety thermocouples and electronic ignition.

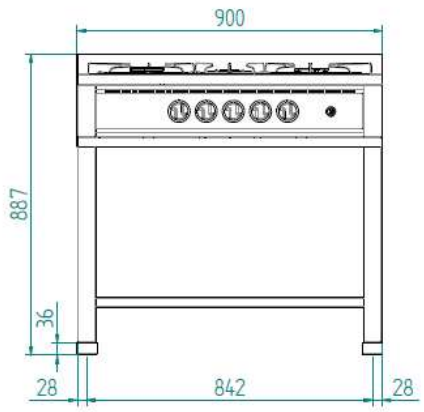

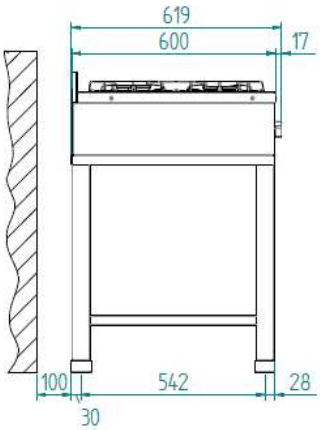

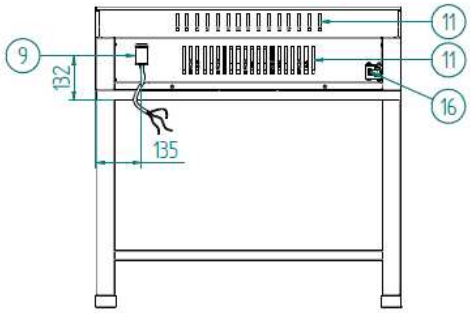

LEGEND

1	USB PORT	11	DON'T CLOG UP VENTILATION OPENINGS
2	SERIAL PORT	12	WATER INLET MAX. 200 kPa
3	PLUG FOR CORE PROBE	13	SOFTENED WATER INLET MAX 200 kPa
4	WATER OUTLET TUBE	14	BOILER CLEANING INLET
5	WASHING WATER INLET	15	DON'T OPEN CAP WHILE WORKING
6	SOFTENED WATER INLET	16	GAS INLET THREADED JOINT 3/4"
7	WATER INLET	17	POWER SUPPLY TO TOP OVEN
8	STEAM OUTLET	18	PRE-CARVED HOLE FOR BOTTOM OVEN POWER SUPPLY
9	ELECTRIC CABLE FIXER	19	STEAM SUCTION PIPE
10	CAUTION! HOT SURFACE		

TECNOEKA SRL - VIA MARCO POLO, 11 - 35010 BORGORICCO - PADOVA - ITALY - TEL. +39 049 5791479 +39 049 9300344 - FAX +39 049 5794387 - E-MAIL: INFO@TECNOEKA.COM - WWW.TECNOEKA.COM - WWW.TECNOEKA.RU

DIMENSIONAL FEATURES			
DIMENSIONI	**W**	**D**	**H**
COOKER DIMENSIONS (mm)	900	620	907
CARDBOARD BOX DIMENSIONS (mm)	960	690	1067
COOKER DIMENSIONS (inches)	35,43	24,25	35,70
CARDBOARD BOX DIMENSIONS (inches)	37,79	27,16	42,00
COOKER WEIGHT (kg)	45		
PACKED COOKER WEIGHT (kg)	61		
COOKER WEIGHT (lbs)	99,20		
PACKED COOKER WEIGHT (lbs)	134,48		
FAN DIMENSIONS (mm)	/		
CENTER-TO-CENTER DISTANCE BETWEEN RUBBER FEET (mm)	/		
DISTANCE BETWEEN RACK RAILS (mm)	/		
ELECTRICAL FEATURES			
OVEN POWER SUPPLY (kW)	/		
FREQUENCY (Hz)	50/60		
VOLTAGE (Volt)	AC 220/230		
N° OF MOTORS	/		
RPM	/		
N° OF RESTISTORS	CIRC.	/	/
	GRILL	/	/
	SOLE	/	/
BOILER	/		
LIMIT CONTROL	/		
PROTECTION AGAINST WATER	/		
LIGHTING	/		

FUNCTIONAL FEATURES			
AISI 304			
BURNERS THERMAL SUPPLY (kW)	14,3		
N°OF BURNERS	5		
TYPE OF BURNERS	CENTRAL TRIPLE-CROWN	1pcs	3,5 kW
	FAST	3pcs	3 kW
	SEMI-FAST	1pcs	1,8 kW
BURNERS IGNITION SYSTEM	ELECTRONIC		
BURNERS SAFETY SYSTEM	WITH THERMOCOUPLE		
CONTROL PANEL	ELECTROMECHANICAL		
FEET	NOT ADJUSTABLE		
EQUIPMENT			
CABLE	SINGLE-PHASE [3G 1,5] - L=1450 mm		
HOB REDUCER CROSS SHAPE			
PLUS			
AISI 304			
COMPACT SIZE			
GREAT STRENGTH			